AD-A089 327 AIR FORCE INST OF TECH WRIGHT-PATTERSON AFB OH SCHOOL--ETC F/G 15/5
AN ANALYSIS OF REPORTS OF ITEM SHIPMENT DISCREPANCIES SUBMITTED--ETC(U)
JUN 80 F E SMITH, M SAENGARAM

UNCLASSIFIED AFIT-LSSR-55-80 NL

1 OF 2
AD A089327

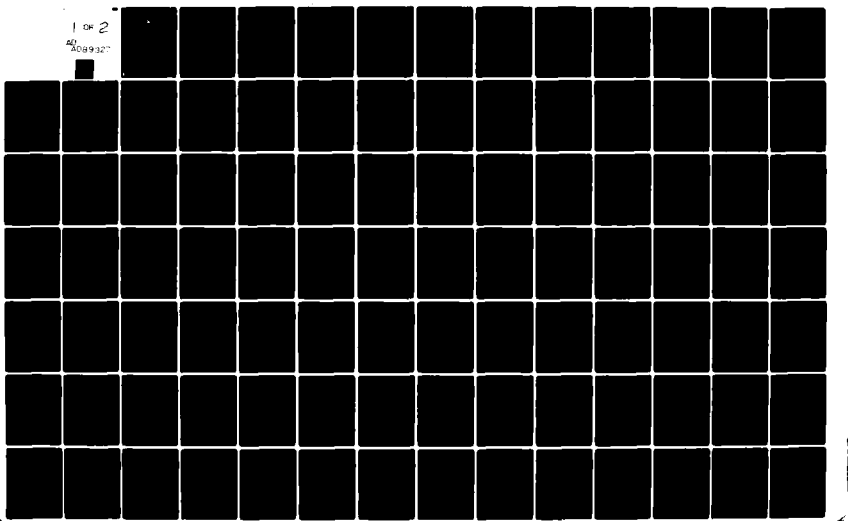

LEVEL II

AD A089327

DTIC
ELECTE
SEP 2 3 1980
S D
A

DISTRIBUTION STATEMENT A
Approved for public release;
Distribution Unlimited

DEPARTMENT OF THE AIR FORCE
AIR UNIVERSITY (ATC)

AIR FORCE INSTITUTE OF TECHNOLOGY

Wright-Patterson Air Force Base, Ohio

DDC FILE COPY

80 9 22 062

(9) Master's Thesis

(6)

AN ANALYSIS OF REPORTS OF ITEM SHIPMENT DISCREPANCIES SUBMITTED AND PROCESSED BY SELECTED DEPARTMENT OF DEFENSE AGENCIES.

(10) Forrest E. Smith, 1Lt., USAF
Monrak Saengaram, Lt(JG), RTN

(11) June

(12) 1980

14 AFIT-LSSR-55-80

The contents of the document are technically accurate, and no sensitive items, detrimental ideas, or deleterious information are contained therein. Furthermore, the views expressed in the document are those of the author(s) and do not necessarily reflect the views of the School of Systems and Logistics, the Air University, the Air Training Command, the United States Air Force, or the Department of Defense.

USAF SCN 75-20B AFIT Control Number LSSR 55-80

AFIT RESEARCH ASSESSMENT

The purpose of this questionnaire is to determine the potential for current and future applications of AFIT thesis research. Please return completed questionnaires to: AFIT/ LSH (Thesis Feedback), Wright-Patterson AFB, Ohio 45433.

1. Did this research contribute to a current Air Force project?

   a. Yes b. No

2. Do you believe this research topic is significant enough that it would have been researched (or contracted) by your organization or another agency if AFIT had not researched it?

   a. Yes b. No

3. The benefits of AFIT research can often be expressed by the equivalent value that your agency received by virtue of AFIT performing the research. Can you estimate what this research would have cost if it had been accomplished under contract or if it had been done in-house in terms of man-power and/or dollars?

   a. Man-years _____ $ _____ (Contract).

   b. Man-years _____ $ _____ (In-house).

4. Often it is not possible to attach equivalent dollar values to research, although the results of the research may, in fact, be important. Whether or not you were able to establish an equivalent value for this research (3 above), what is your estimate of its significance?

   a. Highly Significant b. Significant c. Slightly Significant d. Of No Significance

5. Comments:

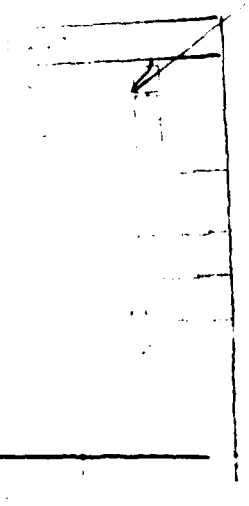

Name and Grade Position

Organization Location

OFFICIAL BUSINESS
PENALTY FOR PRIVATE USE, $300

NO POSTAGE
NECESSARY
IF MAILED
IN THE
UNITED STATES

BUSINESS REPLY MAIL
FIRST CLASS PERMIT NO. 73236 WASHINGTON D.C.

POSTAGE WILL BE PAID BY ADDRESSEE

AFIT/LSH (Thesis Feedback)
Wright-Patterson AFB OH 45433

UNCLASSIFIED

SECURITY CLASSIFICATION OF THIS PAGE (When Data Entered)

REPORT DOCUMENTATION PAGE	READ INSTRUCTIONS BEFORE COMPLETING FORM
1. REPORT NUMBER: LSSR 55-80	2. GOVT ACCESSION NO.: AD-A089 327
3. RECIPIENT'S CATALOG NUMBER:	
4. TITLE (and Subtitle): AN ANALYSIS OF REPORTS OF ITEM SHIPMENT DISCREPANCIES SUBMITTED AND PROCESSED BY SELECTED DEPARTMENT OF DEFENSE AGENCIES	5. TYPE OF REPORT & PERIOD COVERED: Master's Thesis
	6. PERFORMING ORG. REPORT NUMBER:
7. AUTHOR(s): Forrest E. Smith, First Lieutenant, USAF Monrak Saengaram, Lieutenant (JG), RTN	8. CONTRACT OR GRANT NUMBER(s):
9. PERFORMING ORGANIZATION NAME AND ADDRESS: School of Systems and Logistics Air Force Institute of Technology, WPAFB OH	10. PROGRAM ELEMENT, PROJECT, TASK AREA & WORK UNIT NUMBERS:
11. CONTROLLING OFFICE NAME AND ADDRESS: Department of Communication and Humanities AFIT/ LSH WPAFB OH 45433	12. REPORT DATE: June 1980 13. NUMBER OF PAGES: 158
14. MONITORING AGENCY NAME & ADDRESS (if different from Controlling Office)	15. SECURITY CLASS. (of this report): UNCLASSIFIED 15a. DECLASSIFICATION DOWNGRADING SCHEDULE:

16. DISTRIBUTION STATEMENT (of this Report)

Approved for public release; distribution unlimited

17. DISTRIBUTION STATEMENT (of the abstract entered in Block 20, if different from Report)

APPROVED FOR PUBLIC RELEASE AFR 190-17

FREDRIC C. LYNCH, Major, USAF
Director of Public Affairs

18. SUPPLEMENTARY NOTES

19. KEY WORDS (Continue on reverse side if necessary and identify by block number)

Item Shipment Discrepancy
Shipment Discrepancy
Report of Discrepancy
Quality Assurance
Supply Depots

20. ABSTRACT (Continue on reverse side if necessary and identify by block number)

Thesis Chairman: Thomas C. Harrington, Major, USAF

DD FORM 1 JAN 73 1473 EDITION OF 1 NOV 65 IS OBSOLETE

UNCLASSIFIED

SECURITY CLASSIFICATION OF THIS PAGE When Data Entered

This thesis deals with item shipment discrepancy reports submitted by receiving activities on a Standard Form 364, Report of Item Discrepancy (ROID). The specific questions addressed concern the timely submission and usefulness of the report. The research consists of three parts. The first part examines the time it takes to process a report. The second part deals with identifying the major types of item shipment discrepancies. The final portion addresses the usefulness of the report in determining the underlying causes and the corrective actions taken as a result of the report. Recommendations made are designed to alleviate the shortcomings of the current program to enable the various shipping activities to be more responsive to the problems encountered by the customer. The information analyzed consists of data from four Air Force bases and the Defense Electronics Supply Center.

LSSR 55-80

AN ANALYSIS OF REPORTS OF ITEM SHIPMENT DISCREPANCIES SUBMITTED AND PROCESSED BY SELECTED DEPARTMENT OF DEFENSE AGENCIES

A Thesis

Presented to the Faculty of the School of Systems and Logistics

of the Air Force Institute of Technology

Air University

In Partial Fulfillment of the Requirements for the

Degree of Master of Science in Logistics Management

By

Forrest E. Smith, BBA
First Lieutenant, USAF

Monrak Saengaram, BS
Lieutenant (JG), RTN

June 1980

Approved for public release;
distribution unlimited

This thesis, written by

First Lieutenant Forrest E. Smith

and

Lieutenant (JG) Monrak Saengaram

has been accepted by the undersigned on behalf of the faculty of the School of Systems and Logistics in partial fulfillment of the requirements for the degree of

MASTER OF SCIENCE IN LOGISTICS MANAGEMENT

DATE: 9 June 1980

COMMITTEE CHAIRMAN

ACKNOWLEDGMENTS

The authors would like to extend their deepest appreciation to all those people who contributed their time and effort to make this study possible. We are most grateful for the initial assistance in getting this project off the ground rendered by Captain Brad Cook and Mr. Robert Brown. The cooperation of Lt. Col. Richard Morse and his staff at the Defense Electronics Supply Center, especially Ms. Linda Johnson, was outstanding. We would also like to thank Ms. Suzanne Weber, whose ability to read our handwriting and cut-up drafts was nothing short of phenomenal. A special note of thanks goes to our thesis advisor, Major Thomas Harrington, without whose advice and encouragement this study could not have been completed.

Most of all, we would like to dedicate this thesis to our families. Without their understanding and support, none of this would have been possible.

TABLE OF CONTENTS

	Page
ACKNOWLEDGMENTS	iii
LIST OF TABLES	vii
LIST OF FIGURES	viii
Chapter	
I. INTRODUCTION	1
Problem Statement	3
Definitions	4
Scope	5
Literature and Experience Review	6
Reasons for ROID Programs	6
Corrective Actions Taken on ROIDs	11
Previous ROID Studies	13
Submission of ROIDs	15
Research Objectives	18
Research Questions	18
II. METHODOLOGY	20
Research Question 1	22
Research Question 2	26
Research Question 3	26
III. DATA COLLECTION AND ANALYSIS	30
Data Collection	30
Data Limitations	34
Data Analysis	35

Page

Research Question 1 35

Research Question 2 46

Research Question 3 49

IV. CONCLUSIONS AND RECOMMENDATIONS 65

Timeliness. 66

Conclusions 66

Recommendations 68

Major Types of Discrepancies. 69

Conclusions 69

Recommendations 72

Determination of Causes and Corrective Actions. 74

Conclusions 74

Recommendations 76

Recommendations for Further Research. 76

APPENDIX A: SPSS SUBPROGRAM BREAKDOWN STATISTICS FOR SHIPPER'S RESPONSE TIME. 78

APPENDIX B: FREQUENCY DISTRIBUTION OF THE RESPONSE TIME FOR SELECTED SHIPPERS AND DISCREPANCIES 83

APPENDIX C: SELECTED STATISTICS OF THE OVERALL RESPONSE TIME BY SHIPPER, DISCREPANCY, AND RESPONSE 96

APPENDIX D: FREQUENCY DISTRIBUTION OF THE TYPE OF DISCREPANCY FOR SELECTED SHIPPERS. 100

APPENDIX E: STANDARD FORM 364 REPORT OF ITEM DISCREPANCIES - OLD AND NEW FORMATS 108

APPENDIX F: QUALITY EVALUATION SYSTEM: CLOSED DOCUMENT REPORT AND BREAKDOWN OF CODING. . . . 113

APPENDIX G: ACTIVITIES AND LOCATIONS OF SHIPPER INCLUDED IN ROIDS SUBMITTED BY SAMPLE BASES. 121

Page

APPENDIX H: FREQUENCY DISTRIBUTIONS OF THE CAUSES OF DISCREPANCIES BASED ON SAMPLE DESC REPORTS 125

APPENDIX I: PROCESS FLOW CHART 134

APPENDIX J: SPSS SUBPROGRAM BREAKDOWN STATISTICS FOR SHIPPER'S RESPONSE TIME BASED ON 1352 OBSERVATIONS 146

SELECTED BIBLIOGRAPHY 150

LIST OF TABLES

Table		Page
I	Summary of Reports of Item Discrepancies Submitted by Selected Air Force Bases.	31
II	Total Requisitions Shipped by the Defense Electronics Supply Center (DESC) 1 June - 30 September 1979.	33
III	Analysis of Variance for Response Time	36
IV	Differences Among Means of Response Times (All ROIDs).	38
V	Analysis of Variance for Response Time (Without GSA D1 ROIDs)	39
VI	Differences Among Means of Response Times (Excluding GSA D1 ROIDs)	40
VII	Summary of Values Used to Compute Test Statistics and Final Conclusions	41
VIII	Summary of Outstanding ROIDs	42
IX	Summary of Data Used to Determine Potential Problem Areas.	55
X	Summary of Data Used to Determine Effectiveness of Corrective Actions.	64
XI	Summary of Types of Discrepancies By Percentages of Occurrence.	70

LIST OF FIGURES

Figure		Page
1	Relationship of Receiver, Shipper, and Contractor.	7
2	Example of a Civilian Discrepancy Report (Passive Method).	9
3	Example of a Civilian Discrepancy Report (Active Method)	10
4	Report of Item Discrepancy (ROID) Processing Flow.	21
5	Location of DLA Depots, Supply Centers, and Sample Bases.	23
6	Example of Defense Logistics Agency Reply to Requests for Documentation.	44
7	Example of General Services Administration Reply to Request for Documentation.	45
8	Control and Feedback System	74

CHAPTER I

INTRODUCTION

In mid-August 1978, the House Appropriations Committee charged that the military supply system was wasting several million dollars each year (19:1). The committee recommended legislation which would cut $155 million from the services' operations funds. The Air Force share was $50 million. The members of the committee said that the individual services could easily make up for the recommended cuts by "eliminating waste in their supply systems . . . [19:22]." The reaction by the services was almost immediate. The word flowed down through channels that corrective action must be taken. One particular program implemented by the Air Force was called Project STOP LOSS. The Air Force Office of Special Investigation completed a survey of six bases and found few serious procedural discrepancies, but numerous small deficiencies such as excessive issue of sun glasses, unauthorized issue of flight clothing and other supply issue abuses (24). Each of the commands was directed to reduce these losses and, in general, to tighten up lax procedures. General Slay, Commander AFSC, stated that he wanted all his commanders "to be particularly alert to abuses in supply procedures and allowances and violations of the principles of good material resources management [39]." Many areas were looked into and

procedures were changed as the pressure to identify problem areas and take immediate corrective action to show Congress that the Air Force was concerned about poor supply procedures was great. One area of particular interest focused on discrepant shipments received by base supply activities from various shippers. Although there are many types of discrepant shipments, the only one looked at in detail under Project STOP LOSS were shipments which contained shortages (9; 29), as these discrepancies were highly visible and the cost of the short shipments could easily be calculated. However, the efforts under Project STOP LOSS were short-lived as the project was de-emphasized in October 1979, when the project was placed into AFR 125-37 (23). Further, as noted above, other types of shipment discrepancies which are more difficult to account for were ignored during the project.

All types of discrepancies are reported using a Standard Form 364 (SF364) Report of Item Discrepancy (ROID).[1] Correct use of the ROID can be a useful aid in improving supply operations. These reports can aid both the shipping and receiving activities in determining problem areas other than shortages. However, this valuable tool may not be utilized fully at this time.

---

[1]The SF364 was redesigned and redesignated Standard Form 364, Report of Discrepancy (ROD) on 1 February 1980, well after this research was under way. The old terminology will be retained for the purposes of this thesis.

Problem Statement

The Department of Defense (DOD) logistics community has been directed by the Defense Logistics Agency (DLA)[2] to maintain a discrepancy reporting system as part of an overall Quality and Reliability Program. DLAR 4140.55[3] was developed by agreement among the military services, DLA and the General Services Administration (GSA) to prescribe the method and conditions under which item discrepancies in shipments determined to be the responsibility of the shipper are to be reported and answered. The main reason for the discrepancy report is to determine the cause of the discrepancy so that correction/remedial actions can be taken (57:2). However, there is an expressed feeling among supply procedures personnel (8; 9; 60) that the existing system for reporting item discrepancies between Air Force base-level receiving activities and the major DOD and GSA shipping activities does not aid in identification of the basic causes of discrepancies, and that corrective actions are not taken as a result of a ROID submission. Furthermore, it is imperative that these reports be processed in a timely manner by all parties involved. Any delay in processing means that other erroneous shipments could be made, further aggravating

---

[2]The Defense Logistics Agency (DLA) was called the Defense Supply Agency (DSA) until 1 January 1977 (51:1).

[3]This is a joint regulation. The Air Force designation prior to 1 February 1980 was AFR 67-16, it is now AFR 400-54.

the problem and causing an increase in the number of ROIDs which must be processed. If the ROIDs are not processed within a certain timeframe, the receiving activity may not receive monetary credit (17:6; 36:Atch.6; 65:4; 66:5). Another example of the need for timeliness can be found in the inventory adjustment problems being experienced by the Army and Navy depots. The General Accounting Office (GAO) did a study in 1978 which concluded:

> Accurate inventory records are essential to effective supply management. . . . Inaccurate records cause adverse effects--if stock exists but is not on the inventory record, unneeded stock may be purchased and if stock is on the inventory record but does not physically exist, the customer needs may not be satisfied [65:4].

The timely reporting and processing of ROIDs can help prevent the problem of inaccurate records and unnecessary purchases. DLA, GSA, and the Military Services have agreed that most problems should be resolved within thirty days (57:9).

Definitions

Key terms used in this paper are defined as follows:

1. Discrepancy Report. A report of the receipt of an item which is deficient in some aspect and which is officially reported on a Standard Form 364 (SF364) Report of Item Discrepancy (ROID). Appendix E contains a sample of this report.

2. Item-Shipment Discrepancy. A requisition which is received and is found to contain a shortage or an overage, erroneous materials, hidden condition which affects its usefulness, missing or incomplete technical data markings,

missing supply documentation, or a misdirected shipment which can reasonably be assumed to be the fault of the shipping activity (57:7-8). These discrepancies are encoded and reported by means of the ROID program.

3. Shipper. Any Defense Logistics Agency (DLA), General Services Administration (GSA), or Military Logistics Center from which the item in question was delivered by any mode of transportation.

4. Receiver. The DOD agency which submitted the original requisition. In the Air Force, the Standard Base Supply System (SBSS) units submit virtually all such requisitions.

Scope

For the purpose of this study, only the ROIDs submitted by the Military Services as the result of an item shipment discrepancy will be looked at in detail. The flow of interest will be from receiver to shipper to receiver.

The ROID is used by many other activities including Grant Aid recipients who receive items of supply through DOD channels (64:p.3-5), Foreign Military Sales (56:9), DLA, GSA, and all Military Services. The form can flow in two ways: from shipper to contractor to shipper, and from contractor to shipper to contractor (22). The form can be used for several other purposes, such as reporting problems (62: p.7-7), quality deficiencies (53:4), material deficiency reports (60:p.3-12), and medical supply deficiencies (63: p.9-5).

The ROIDs submitted by the Military Services are deemed a representative sample of all ROIDs submitted. The military deals with all the different shipping activities on a continuous basis. The ROIDs submitted by other agencies, for other purposes, and for other flows are outside the scope of this report. Figure 1 shows the general relationship between the receiving activities (i.e. SBSS unit) and the various shippers (i.e. DLA).

Literature and Experience Review

Reasons for ROID Programs. Customer service is a goal of all organizations. However, according to Bardi (4:256), few firms have definitely stated customer service standards. Generally, a broad policy statement such as "the customer is always right" develops over time. This type of customer service level policy "does not permit control of cost nor does it permit evaluation and assurances of consistency [4:256]." Another author has stated that in order for an organization to make better procurement decisions, "it is necessary to place a great deal of emphasis on the delivery performance of all suppliers [10:26]." Actions, not words, produce results. Voich, et al. state that the status of receipt and level of satisfaction relating to products received by customers should be part of any analysis program (67:15). Several authors have stated that two-way communication is a must in providing efficient and economical service (4:250; 14:4; 32:205). The description given by Glaskowsky sums up the idea:

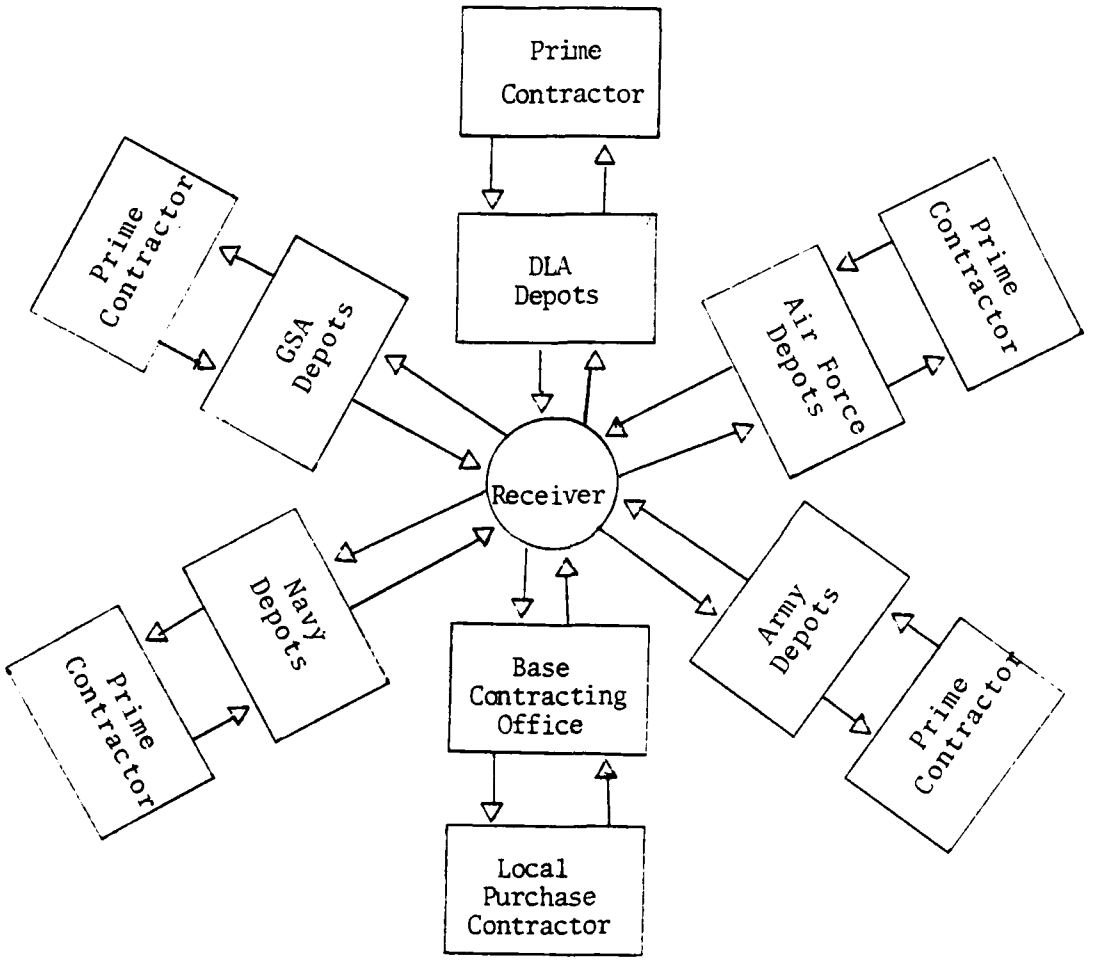

Figure 1

Relationship of Receiver, Shipper, and Contractor

> A system of communication is necessary for obtaining logistics performance data from customers in a systematic feedback basis. Many firms currently attach one or more forms to every shipment to allow the customer to comment immediately upon the condition in which goods arrive. This might be particularly valuable in detecting damage for which a customer might be reluctant to file a claim [14:167].

The use of a form for reporting shipment discrepancies is not new, nor is it unique to the military supply system. Civilian organizations also use a discrepancy report form extensively. Figure 2 shows an example of a form used in the past by one company (32:Fig.21-4). The use of the form is similar to the ROID in that it is originated by the receiving activity. Some more aggressive civilian shippers, in fact, actually attach a discrepancy report form to the shipping documents. Rather than hope that the receiver will initiate problem reports, they attempt to insure that any discrepancy, no matter how small, will be reported. Figure 3 shows an example of this type of form (32:Fig.15-6). The reason cited for the use of this form is that "many claims for minor damage are never filed. Customer dissatisfaction results from both major and minor damage [14:430]." Bardi (4:260) states that any company which does not take the initiative to secure information on minor shipping damage runs the risk of losing that customer. In addition to sending a form, he recommends that the firm's salesmen ask each customer about damages. These contacts "provide a ready solution to ascertaining the silent threat to a firm's customer service [4:260]." To support its customers, DLA as well

To.....
.....

A. & B. COMPANY LTD.
CALCUTTA

Ref : PS/
Date

DISCREPANCY REPORT

Dear Sirs,
We have to report the following discrepancy in regard to materials supplied under your Challan No..... dated .....
against our order No .....dated .....

Code No.	Description	Qty. shown on challan	Qty. Recd.	Remarks

Would you kindly look into this matter and let us have your remarks by return. In the meantime please note that payments will be made only on the basis of the material received/accepted by us.

Copy to : (1) Supplier
(2) Accounts
(3) Purchase
(4) Receiving Section

Yours faithfully,
For A. & B. Co. Ltd.

Receiving Section

Figure 2

Example of a Civilian Discrepancy Report (Passive Method)

as other shippers (17:5; 59:p.8-7)) have set up programs to handle customers complaints. Entire sections have been established to process ROIDs (22:15; 51:6). For example, one of the objectives of the Defense Electronics Supply Center's (DESC) Quality and Reliability Assurance Program is to prevent/eliminate customer dissatisfaction with supplies

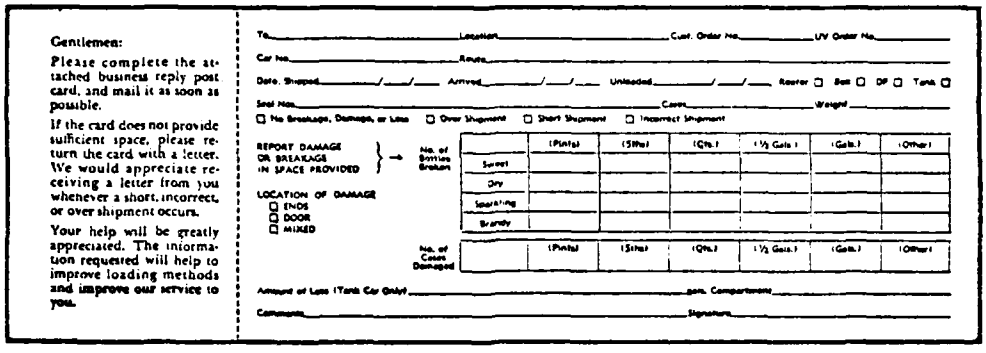

Gentlemen:

Please complete the attached business reply post card, and mail it as soon as possible.

If the card does not provide sufficient space, please return the card with a letter. We would appreciate receiving a letter from you whenever a short, incorrect, or over shipment occurs.

Your help will be greatly appreciated. The information requested will help to improve loading methods and improve our service to you.

To_____ Location_____ Cust. Order No._____ I/V Order No._____

Car No._____ Route_____

Date. Shipped____/____/____ Arrived____/____/____ Unloaded____/____/____ Reefer ☐ Box ☐ DF ☐ Tank ☐

Seal No._____ Cases_____ Weight_____

☐ No Breakage, Damage, or Loss ☐ Over Shipment ☐ Short Shipment ☐ Incorrect Shipment

REPORT DAMAGE OR BREAKAGE IN SPACE PROVIDED → No. of Bottles Broken

	(Pints)	(5Pts)	(Qts.)	(½ Gals.)	(Gals.)	(Other)
Sweet						
Dry						
Sparkling						
Brandy						

LOCATION OF DAMAGE
☐ ENDS
☐ DOOR
☐ MIXED

No. of Cases Damaged

	(Pints)	(5Pts)	(Qts.)	(½ Gals.)	(Gals.)	(Other)

Amount of Loss (Tank Car Only)_____ con. Compartments_____

Comments_____ Signature_____

Figure 3

Example of a Civilian Discrepancy Report (Active Method)

and services by analyzing deficiencies and taking action to correct the causes of these deficiencies (45:p.1-2). DLA sends a representative on a semi-annual visit to each activity it serves to check customers' complaints which may not have been reported (51:6).

The Air Force has established a discrepancy reporting system to meet the higher echelon requirements. The basic outline can be found in AFM 67-1, Vol. I, Part One, Section D, which states:

> Controls will be established to insure that discrepancies are judiciously reported, that discrepancy reports received are thoroughly investigated to determine the cause, and that correction action is taken to prevent recurrence [60:p.5-33].

Air Force Logistics Command (AFLC) also has implemented a program to meet these objectives for its five depots. The regulation states:

> It is imperative that quality and reliability

> feedback data be promptly and properly reported since this will insure prompt corrective and preventive measures. Quantitative quality and reliability data is necessary in identifying and segregating deficient supplies and equipment from good serviceable stock, establishing economical inspection cycles, and isolating problem suppliers, production areas, production personnel, and processes [4:p.4-16].

The final rung on the ladder is the Standard Base Supply System unit whose activities are guided by the AFM 67-1, Vol. II, Part Two.

Corrective Action Taken on ROIDs. Another major use of the discrepancy report is to determine when corrective actions must be taken. Civilians, as well as military receivers, need the items they ordered. One author suggests that the most common measure of delivery performance is in terms of orders delinquent (10:22). Even if the order is eventually received, it may not be useful. Glaskowsky states:

> The achievement of planned logistics performance is of no use if goods arrive in a damaged condition. In fact, on-time performance is destroyed if the goods cannot be used [14:167].

The same logic applies to short, misidentified, and misshipped deliveries. If the receiver cannot supply his own customers, considerable economic losses can be incurred. Even if credit is granted on the item eventually replaced, the credit does not cover the economic loss which results from lost sales. In the civilian sector, if the customer is angered by repeated problems, he can and will turn to another supplier. In the military environment, all orders are placed through specific organizations such as DLA and GSA.

The manager has no choice of supplier, so the discrepancy report takes on even more significance. It is the manager's only method of showing his dissatisfaction of the system.

The types of corrective actions which may be taken by shipping activities in response to the submission of a ROID are lacking in many of the current directives. Directions to "prepare summaries which may be used as local management tools [60:p.5-33]" or "take action to prevent recurrence of the problem using current procedures [46:p.2-3]" are used. However, this is not the case for quality deficiency reports. The guidance in this area is very specific (53:5). The managers at each DLA activity are responsible for insuring that corrective actions are taken (22:34).

An informal telephone survey of several base-level receiving activities by the authors revealed that very little is being done formally on the base level in the area of ROIDs. The vagueness of the regulations may contribute to the problem at the local level.

This problem was highlighted at a recent ROID workshop held at the Oklahoma City Air Logistics Center (ALC). Managers for the various ALCs noted that there was a great deal of confusion over the responsibility for processing ROIDs (36:Atch.8). This is not only an Air Force problem; the Army has the same problem with the customer's lack of knowledge of the Army logistical system (17:15).

In summary, the corrective actions taken by depot-level managers are unfocused in nature. The quality of the program

rests on the aggressiveness of the manager. There is little documented crossflow between depot managers on common problem areas or successful solutions to these problems.

Previous ROID Studies. Research of existing files revealed that two official reports have been completed on ROIDs in the past five years. One was an Army report on Foreign Military Sales (FMS) shipping discrepancies done in 1974 (17). A new report on FMS ROIDs was scheduled for completion in December 1979, but was dropped because of higher priorities (35). The other report was a staff study done by the Supply Procedures personnel at HQ ATC in early 1978. This report was geared at looking at short shipments under Project STOP LOSS. The results were mixed; however, the base-level managers did report that they felt that the ROID system was not very responsive and that it seemed to them that adequate corrective actions were not being taken by depot-level managers (9). Informal discussions with other base-level managers revealed the same thoughts (8; 27).

The lack of corrective action is not fully perceived by higher echelon managers. They do not see any major problems with the current system (21; 22; 31; 42). One problem is that they have no established standard for guidance. Michaels has noted that "we must have reference points as indicators to tell us whether we're successfully moving toward a new state. . . [30:382]." It is extremely difficult to determine if you have a problem if there is no overall quality control program. Different organizations collect

and report the data in different formats. Bardi mentions one possible method of determining such a standard:

> The establishment of an "acceptable" dollar amount of product damage per time period per logistics functional unit as well as an "acceptable" frequency of damage per time per logistics functional unit is a prerequisite to effective control of product damages [4:259-260].

The regulations used by the Military Services and DLA are not very specific on this point. The Department of the Army (DA) attempts to use ROIDs as a percent of requisitions filled as a performance base. "The management (DA) goal is no more than one-half of one percent of requisitions filled [17:6]." The Quality Assurance Division at DESC has an informal standard of 1.2 percent on shipment discrepancies (22). A recent staff study done on Quality Deficiency Reports in the same division revealed an actual rate of less than 1/2 of 1 percent (31). No universal standard has been established to guide DLA depot managers as of this time.

Data collected from fourteen ATC bases in 1978 for a six-month period revealed that a total of 1863 ROIDs were submitted for various reasons (9). Other data available concerned Army FMS ROIDs. The figure in this case was an average 564 per month over a twelve-month period from July 1972 through March 1973 (17:3). The figures collected by DLA include all ROIDs submitted for any reason and are not broken down by major category. The DLA summaries calculated in the computer management products are by number of line items and dollar value, not by number of ROIDs submitted (48).

HQ AFLC collects the number of ROIDs submitted by bases to each of its ALCs on a monthly basis. However, the data are incomplete and comparisons may be meaningless (2; 36: Atch.12). This hinders the establishment of any type of standard. The importance of establishing performance standards is also emphasized by the Department of Defense (DOD). One regulation states:

> Development and use of appropriate types and levels of labor performance standards can contribute significantly to productivity improvements. It is important that standards and control indicators be established consistent with management needs at the various levels of responsibility [43:Encl.1, p.2].

Submission of ROIDs. Another area of concern relates to the submission of discrepancy reports. Voich, Mottice and Schrode noted that "the timeliness of information has a direct impact upon managerial performance [67:230]." They also suggested four criteria to measure the effectiveness of reports: quality of information, quantity of information, timeliness of information and cost of information (67:33).

Preparation and handling of these reports can be very time-consuming. An effective program must take this fact into consideration. Some companies in the civilian sector have an established policy that damages of less than $15 or $20 will not be filed since the cost of filing the claim is greater than the recoverable value (4:260). The Air Force has established a similar policy by stating that it is

> important to establish . . . controls to preclude initiation of reports which cannot reasonably be expected to result in overall benefits at least equal

to the administrative cost of processing the report [60:p.5-33].

Although DLA and GSA have not established a cost of processing a ROID specifically, the fact that they put a $100 limit and a $25 limit respectively on credit for discrepant shipments is, implicitly, a rough administrative cost (54:Table 4-02). There is discussion at this time concerning whether or not to raise the DLA limit to $500 (9; 27; 31). No reports could be located which showed that any studies have been recently completed on the actual costs of processing a ROID at the base and/or depot levels. However, even though manuals discourage processing a report which exceeds the possible benefits, the manuals also state that certain types of discrepancies will be reported at all times. AFR 67-16 states that for shipments from DLA and GSA activities, bases will report:[4] 1) all shortages or overages which are over $25 per line item; 2) erroneous material regardless of dollar value; 3) condition discrepancies over $25 per line item; 4) material received on which the shelf life has expired, regardless of dollar value; 5) misdirected shipments of any value; 6) any time supply documentation is missing; and 7) any repetitive discrepancy regardless of dollar value (57: 7-8). The above policies result in bases processing reports

---

[4]As noted earlier, AFR 67-16 was recently replaced by AFR 400-54. Some of the reporting criteria have been changed (58:6). However, the ROIDs analyzed in this study were submitted and processed under the guidelines established by AFR 67-16. The biggest change was in dollar values.

which could reasonably be assumed to cost more to prepare than the initial benefits which would result. For example, an Air Force activity submitted a report on an incorrect item to DESC. The value of the item was $5. DESC closed out the report listing the cause as a random occurrence (48: 3). The Navy submitted a report of an incorrect item valued at $2 to DESC. It took 49 days to determine that the probable cause was a random warehouse error (48:7). However, the Army submitted a report of a possible quality problem on an item worth $4 which eventually resulted in the specifications being reviewed for possible change (48:11). Other activities may have decided that the same type of discrepancies should not be reported due to the excessive processing costs (8; 9; 22; 27). A recent study by the Dartnell Institute of Business Administration stated that the average cost of the business letter in 1979 had risen to $5.59 (71:31). The processing of a ROID is at least this much and, as stated above, probably a lot more. Several experienced personnel were unable to state the actual cost of processing an individual ROID (21; 22; 27; 69).

Unless all discrepancies are reported in some manner, it is very difficult to determine any trends or specific problem areas because in-house records contain only the problem actually reported by the customer. In his study on FMS ROIDs, Griswold noted that the improper use of the ROID in this manner results in distorted figures which are useless for statistical purposes (17:6-9). This is a continuing

problem faced by the civilian sector also (4:260). The frequent occurrence of smaller dollar value discrepancies could pose a serious problem in the aggregate to the customer and the supplier if they are left unreported. Not all discrepancies may be reported at this time, especially those of a low value (22; 29; 68).

Research Objectives

There are three objectives identified with this study:

1. To determine if the ROIDs submitted from the base-level receiver on a SF364 to the various shippers are processed within the time period required by the governing regulations.

2. To evaluate the types and frequencies of item shipment discrepancies (ROIDs) submitted by the receiver on a SF364 for action by the shipper.

3. To evaluate the type of corrective actions taken by the shipper to eliminate future recurrences of a similar discrepancy as that reported on the ROID by a receiver.

Research Questions

1. Are the shipping activities processing the ROIDs within the timeframe required by regulations?

2. What types of shipping discrepancies are reported by receiving activities to the shipping activities on a ROID, and what is the frequency of occurrence of each type?

3. Does the information provided by the receiving activity on the ROID allow the shipping activity to accurately

identify the cause of the item discrepancy and does the correction action taken by the shipping activities for each type of discrepancy reported by the receiving activity aid in preventing recurrences of similar problems?

With these three research questions firmly in mind, the next step was to develop a methodology which would enable us to answer them. The details of the methodology will be discussed in Chapter II.

CHAPTER II

METHODOLOGY

The general approach to this study was to collect data from both the receiving activity and the shipping activity. The data in Sections 1, 9-14 and 27b of the ROID were analyzed to answer the questions raised by the three research questions outlined in Chapter I. The specific methodology for each question differs slightly, so each is discussed separately. Each discussion includes the source of the data and any relevant background information, the applicable sampling techniques, and the method of analysis.

All of the data analyzed at both levels are from the period 1 June 1979 through 30 September 1979. The sample period was selected because it is the most current data available which has completed the receiver to shipper to receiver cycle. Figure 4 shows this cycle. Data for this period from HQ DLA show that the number of requisitions filled by their depots is fairly consistent for this period and does not contain any abnormalities (69).

The Statistical Package for the Social Sciences (SPSS) programs were used to analyze problems of a statistical nature. SPSS is an integrated system of computer programs. It "provides a unified and comprehensive package that enables the user to perform many different types of data

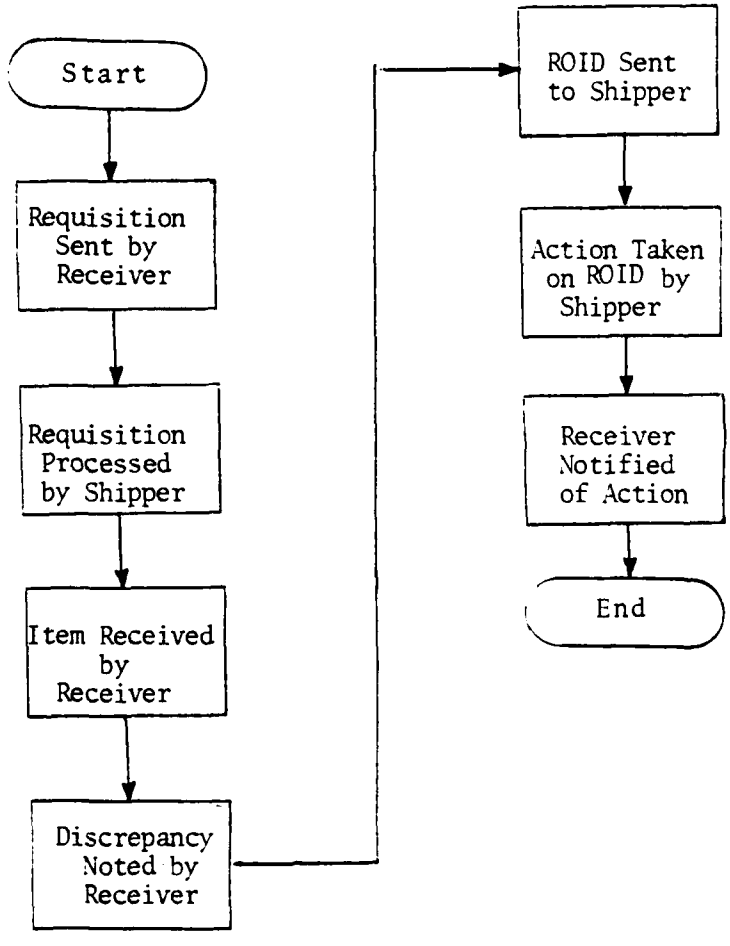

Figure 4

Report of Item Discrepancy (ROID)
Processing Flow

analysis in a simple and convenient manner [34:1]."

Research Question 1

The internal secondary source of data for this portion of the study was those ROIDs actually submitted on a SF364 by receiving activities to any one of the various shipping activities. Since there is no central repository for all CONUS ROID data, as there is for overseas FMS ROID data (27; 31), a sample was used.

The sample was a nonprobablistic convenience one. Four SBSS units offered to submit the data on all ROIDs which they had submitted to any shipping activity during the survey period. The four bases are: Wright-Patterson AFB, OH (AFLC); K.I. Sawyer AFB, MI (SAC); Mather AFB, CA (ATC); and Keesler AFB, MS (ATC).

These bases represent three different major air commands with different primary missions. Wright-Patterson AFB is basically a research and development activity as well as a center for several headquarters. K.I. Sawyer AFB is an operational flying base which supports three primary types of aircraft (B-52, KC-135, F-106) as well as various transient aircraft. Mather AFB is a navigator training activity and Keesler AFB is a technical training center. The bases are located in different parts of the country, each with its various characteristics such as distance from shipping activities, availability and type of transportation modes, and weather. Figure 5 shows the location of the sample bases.

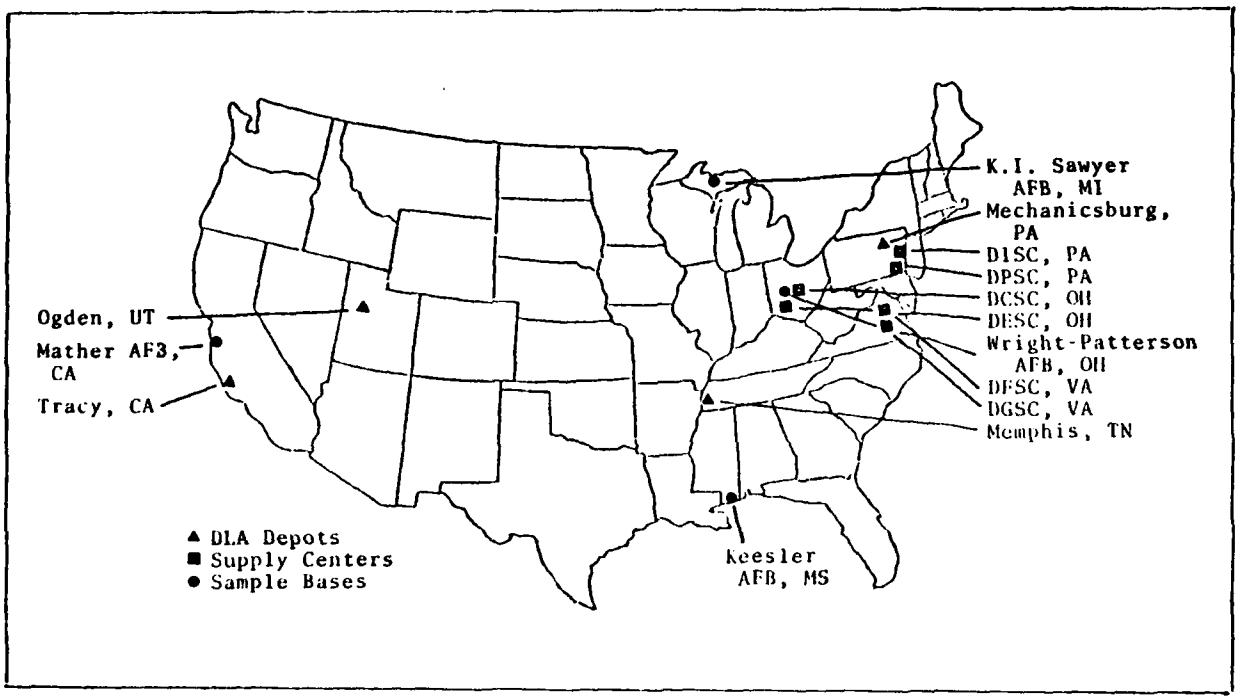

Figure 5

Location of DLA Depots, Supply Centers, and Sample Bases

The dependent variable in this portion of the study was the time it takes the ROID to complete the processing cycle. The variable was calculated by subtracting the date in section 27b from the date in section 1 of the ROID. The independent variable was the shipping activity to which the ROID was originally submitted. This research area can be analyzed by using two sets of statistical hypotheses. The first set is:

H_0: $\mu_1 = \mu_2 = \mu_3 \cdots \mu_r$

H_1: at least one μ_r is not equal

H_0 is the null hypothesis which states that the mean (μ) ROID processing times for each of the shipping activities (r) are equal. Alternately, the H_1 hypothesis states that at least one mean is not equal to the others. An F ratio analysis of variance provides a test of this hypothesis (25:59). In the analysis of variance (ANOVA) test, there are several assumptions which must be met or the test may not be valid: the distribution is normally distributed, there is a common variance, and that the error terms are independent (33:526-538). However, Kirk has stated that

> unless the departure from normality is so extreme that it can be readily detected by visual inspection of the data, the departure will have little effect on the probability associated with the test of significance [25:61].

He also stated

> that the F distribution is so robust with respect to violation of the assumption of homogeneity of error variance, it is not customary to test this assumption routinely [25:62].

If an overall difference in the means was detected, Scheffe's S method was utilized to determine which specific shipping activity's mean ROID processing time was significantly different from the other mean processing times (25:90). Scheffe's test was selected because it uses a single range value for all the comparisons. This is appropriate for examining all possible linear combinations of group means, not just pairwise comparisons. It is stricter than other A Posteriori contrast tests and is exact for unequal group sizes (34:427-428). The data were further analyzed to see if specific reasons for any significant differences could be determined.

If the null hypothesis was not rejected, it could be concluded that all shipping activities process ROIDs within the same timeframe. Given this conclusion, the next step in the analysis was designed to determine if the ROIDs were being processed by the shipping activities within the 30-day timeframe. The statistical hypothesis set for this test is:

H_0: $\mu \leq 30$ days

H_1: $\mu > 30$ days

H_0 is the null hypothesis which states that the mean (μ) ROID processing time for all ROIDs is less than or equal to 30 calendar days. The alternate hypothesis, H_1, states that the mean exceeds 30 days (33:271). The various regulations specify that the report should be processed within 30 calendar days after receipt at the shipping activity.

DESC has amended the portion to allow for an interim report to be sent out if the 30-day time period will be exceeded (46:p.2-2). The test determined if the shipping activities were within the guidelines required by the regulations. If the test resulted in the rejection of the null hypothesis, then the sample reflected that the ROIDs were not being processed in a timely manner and that command emphasis may be needed to insure the timely processing of the reports.

Research Question 2

The internal secondary source of data for this portion of the study was the same sample data collected for the statistical study in the previous section (Research Question 1).

The data from section 13d of the ROID was analyzed in detail. The type of discrepancy was sorted and tabulated by means of the SPSS subprogram FREQUENCIES. This program can produce tables which portray the distribution and frequencies of the types of discrepancies reported (34:194-202). This portion is descriptive in nature. The analysis showed which type of item shipment discrepancies were more predominant by shipping activity. This facilitated the analysis of Research Question 3.

Research Question 3

As mentioned in Chapter I, there are numerous shipping activities which serve the Military Services. GSA handles most general housekeeping items and office supplies (59: p.8-2). The Army, Navy, Air Force and Marine Corps depots

are responsible for those items not managed by DLA or GSA. DLA handles numerous items through six DLA supply centers and seven supply depots. These are backed up by a number of Military Service facilities which handle DLA-owned property. The Defense Construction Supply Center (DCSC) is the principal manager of construction materials and automotive and construction equipment. The Defense Electronics Supply Center (DESC) has the responsibility for 27 federal supply classes of electronic components. The Defense Fuel Supply Center (DFSC) procures and distributes all fuel products. The Defense General Supply Center (DGSC) manages electrical hardware, materiel handling equipment, machine tools, and photographic materials. The Defense Industrial Supply Cen ter (DISC) is responsible for all vital industrial hardware and precious metals. The Defense Personnel Supply Center (DPSC) manages all food, clothing, and medical supplies (48: 8-16). Figure 5 shows the locations of the primary DLA depots.

For the purpose of this portion of the study, the sample was DESC, which is located in Dayton, Ohio. This was a judgment sample. DESC handles items which are required by all the services on a regular basis. DESC manages an active inventory of about 500,000 line items. This compares with 350,000 managed by DCSC and 200,000 managed by DGSC (48:12-13). DESC ships items to each Military Service almost every day. Total shipments usually exceed 6,000,000 each year (31).

Two sources of data were used for this portion of the

study. First, the latest DESC Quality Evaluation (Closed History) Report, DESC Report Number ECQAOOEB was used to tabulate the types of discrepancies reported to DESC by the Military Services and the causes as determined by the technician. The report included, for example, data for the last 30 months on the submitting service, type of discrepancy, stock number, date received, date closed out, and the cause code. Appendix F has a hard copy example of this report and the breakdown sequence to read it. A four-month extract of this report for the period 1 June through 30 September 1979 was made and analyzed. The data were sorted and arranged according to the type of discrepancy reported and the probable cause code by means of the SPSS subprogram FREQUENCIES. This allowed tabulation of the various types of item shipment discrepancies reported and the associated causes. To ascertain how the cause was determined, discussions were held with the technicians in order to develop a potential flow chart of the path of any given type of discrepancy.

The extract of the 30-month Closed History Report was then used in conjunction with the second source of data, the Closed Report File. The Closed Report File contains copies of the original ROIDs and the actions which were taken by the quality control technicians. The reports are filed by close-out date (22). The extract was reviewed to determine if a ROID was filed against the same Federal Stock Number (FSN) more than three times during the four-month sample

period. This was a judgment sample. Any FSNs which met this requirement were investigated further using the actual ROIDs which were on file. Each report in this category was analyzed with the aid of a quality control technician to see if the information submitted in the ROID allowed the technician to determine the cause and to determine if the corrective action corrected the discrepancy.

In the next chapter we will focus on how the methodology just discussed was applied to the actual sample data which we collected from the four bases and the Defense Electronics Supply Center.

CHAPTER III

DATA COLLECTION AND ANALYSIS

Data Collection

Each of the sample bases forwarded data they had available on the ROIDs that were submitted to all shipping activities during the period 1 June 1979 through 30 September 1979. A grand total of 1352 ROIDs were recorded and are summarized according to base of origin in Table I. This table also includes the total number of requisitions for each sample base (37:10) and the close-out date which indicates the date that the data was forwarded. It is noted that 1.1 percent of requisitions placed had one or more shipment discrepancies resulting in the submission of a ROID and requiring appropriate corrective action to be taken by the shipper.

The data were recorded in IBM punch cards by the sample base and included:

1. Shipping activity to which the ROID was originally submitted
2. Date ROID was submitted by the receiving activity
3. Federal Stock Number, part number, or locally assigned number
4. The quantity shipped by the shipping activity according to the documentation
5. The actual quantity received

TABLE I

Summary of Reports of Item Discrepancies
Submitted by Selected Air Force Bases

Base	Number of ROIDs	Number of Requisitions	Close-Out Date
Wright-Patterson	735	39,625	15 Feb 80
Keesler	318	27,224	12 Feb 80
Mather	151	29,055	5 Feb 80
K.I. Sawyer	148	27,252	8 Feb 80
Totals	1,352	123,156	

6. The discrepant quantity
7. Price per unit
8. Type of discrepancy
9. The date the ROID was received back at the original receiving activity
10. The sample base identifier
11. The response of the shipping activity to the ROID

The managers at the sample receiving activities were asked to evaluate the value of the information provided in the copy of the ROID returned by the shipping activity. This was recorded as positive, negative, or unknown.

Data were also collected for the same sample period from the ROID data base at DESC. The data were extracted from the 30-month Closed History Report data base by means of locally written program (41) and were recorded on IBM punch

cards which included the following information:

1. Center code
2. Submitting organization
3. Discrepancy code
4. Type document code
5. Status code
6. National stock number
7. Quantity reported in error
8. Document number
9. Response factor
10. Disposition code
11. Dollar value
12. Shipping activity (DLA depot)
13. FCSM
14. Cause code
15. Condition code
16. Acceptance code
17. Date ROID received at DESC
18. Date ROID closed out at DESC

The complete breakdown of coding can be found in Appendix F. A total of 2599 records for the period 1 June through 30 September 1979 were extracted from the files on 28 December 1979. Table II is a summary of the requisitions submitted to DESC by the Military Services during the same four-month period. Based on these two reports, the discrepant shipment rate was approximately .167 percent (50).

Of the 1352 ROID observations submitted by the sample

TABLE II

Total Requisitions Shipped by the Defense
Electronics Supply Center (DESC)
1 June - 30 September 1979

	Requisition Line Items Shipped*		
Period	Stocked	Non-Stocked	Total
June	301,289	9,254	310,543
July	319,389	9,370	328,759
Aug.	297,569	8,573	306,142
Sept.	277,219	8,474	285,693
Total	1,195,466	35,671	1,231,137
ROIDs submitted by the Military Services . .			2,058

*Only to the Air Force, Army, Navy, and Marine Corps

bases, a total of 1336 were used in the remainder of this study. The discarded observations included ten base-to-base type reports which were not to be included in this study. In addition, only one observation for a Navy shipping activity and five observations for Army shipping activities were in the sample. The deletion of these sixteen observations did not have any significant impact on the outcome. For example, the overall mean response time with the observations was 42.4645 days (Table J-1) and 42.4618 days (Table C-1) without the data. Accordingly, these observations could be excluded since they were a relatively small sample and might distort the data received on the other shipping activities. A total of 36 individual shipping activities (not including local purchase

sources) were identified in the sample. These activities covered the entire spectrum of offices responsible for replying to a ROID. A summary of all the activities reported and their locations is contained in Appendix G (60:pp.9-39 to 9-272). The individual sources for the commercial and/or local purchase sources were not individually identified. Of the 2599 closed document reports received from DESC, a total of 541 were not to be included in this study, as these reports were submitted by activities other than the Military Services. For example, reports submitted by foreign governments and the Federal Aviation Administration (FAA) were excluded since they were not part of this study.

Data Limitations. Discussions with each of the project managers at the sample bases revealed the fact that not all Base Supply activities are processing the ROIDs in the same manner (8; 15; 18; 72). For example, Base Supply activities do not follow the same procedures for processing requests for missing documentation. One manager stated that he/she submitted a ROID on every discrepancy noted and authorized by the regulation (AFR 67-16). This particular manager did not take into consideration the cost of processing. Another manager stated that it was his/her policy to try to reconstruct the missing document before requesting documentation from the shipping activity. Another manager stated that he/she interpreted the paragraph in the regulation on cost-benefit liberally, and did not process such requests since they were not cost effective.

The second limitation was in the processing dates. The timeframe in which the ROID was processed included mailing time. This was a result of the fact that very few ROIDs were marked by the shipping activity as to the date they were received, completed, and/or returned to the receiving activity. Therefore, the overall response time includes mailing time.

To determine what the approximate mailing timeframe was, the reports from the four sample bases which were submitted to DESC (S9E) were cross-referenced. Based on 20 observations (Sawyer - 6; Wright-Patterson - 3; Keesler - 8; Mather - 3), the average mailing time was 4.5 days outgoing and 6.5 days incoming, for a grand total of 11 days mailing time.

Data Analysis

Research Question 1. The 1336 observations were recoded in four major categories for the purpose of statistical analysis since we were interested in the aggregate performance of each type of shipping activity, not in the individual shippers. The categories were: all General Services Administration (GSA) activities, all Defense Logistics Agency (DLA) activities, all Air Force depots (AFD) and all local purchase sources (LPS). Recoding of the data was accomplished to facilitate SPSS analysis of the data.

The data were first subjected to the SPSS subprogram ONEWAY, which is an Analysis of Variance experimental design procedure based on one factor level. Our single factor was

the response time variable (LAGTIME). This experiment was designed to test whether or not shipping activities were processing ROIDs in the same timeframe.

The test statistic is $F^* = \frac{MSTR}{MSE}$, where MSTR is equal to the treatment mean square and MSE is equal to the error mean square. In SPSS, these are called the between groups mean squares and the within groups mean squares. The results of the ANOVA are summarized in Table III.

TABLE III

Analysis of Variance for Response Time

VARIABLE LAGTIME DAY ROID SENT MINUS DAY RECEIVED BACK

ANALYSIS OF VARIANCE

SOURCE	D.F.	SUM OF SQUARES	MEAN SQUARES	F RATIO	F PROB.
BETWEEN GROUPS	3	61112.4960	20370.8320	6.720	0.0002
WITHIN GROUPS	1332	4040047.5703	3033.0462		
TOTAL	1335	4101160.0625			

The first step under this experimental design was to analyze the F-RATIO. According to Neter, the appropriate decision rule to use, when the alternatives are:

H_0: $\mu_1 = \mu_2 = \ldots = \mu_r$

H_1: not all μ_j's are equal

and the single factor ANOVA model is used, is:

If $F^* \leq F(1-\alpha;\ r-1;\ n_T-r)$, conclude H_0

If $F^* > F(1-\alpha;\ r-1;\ n_T-r)$, conclude H_1

where:

$$F^* = \frac{MSTR}{MSE}$$

$\alpha = .05$

r = number of categories, and

n_T = total number of observations (33:534-535)

The computed F* ratio was 6.720 and the Critical F value was determined to be 2.60, with $v_1 = 3$, $v_2 = 1332$ degrees of freedom (33:Table B-4). The results of this test indicated that we failed to accept the null hypothesis H_0, that the means are equal, therefore the data was subjected to further analysis.

As stated earlier, Scheffe's S method can be used to compare means when the F-RATIO is significant, which is the case here. Scheffe's test was used to make pairwise comparisons of the means to determine the source of the effects. Scheffe's S method uses a computed value, S, where S is given by the formula:

$$S = \sqrt{(k-1)F_{\alpha,\, v_1,\, v_2}} \quad \sqrt{MS_{error}\left[\sum_{j=1}^{k} \frac{(C_j)^2}{n_j}\right]}$$

where:

$F_{\alpha,\, v_1,\, v_2}$ = tabled value of F for v_1 and v_2 degrees of freedom

k = number of treatment levels

C_j = coefficient of the contrast

n_j = number of scores in the jth treatment level

TABLE IV

Differences Among Means of Response Times

(All ROIDs)

```
      VARIABLE  LAGTIME    DAY ROID SENT MINUS DAY RECEIVED BACK

MULTIPLE RANGE TEST


SCHEFFE PROCEDURE
RANGES FOR THE 0.050 LEVEL -

          3.96  3.96  3.96

HARMONIC MEAN CELL SIZE =    247.5698
THE ACTUAL RANGE USED IS THE LISTED RANGE *      3.5002


 HOMOGENEOUS SUBSETS   (SUBSETS OF GROUPS, WHOSE HIGHEST AND LOWEST MEANS DO NOT DIFFER BY
MORE THAN THE SHORTEST  SIGNIFICANT RANGE FOR A SUBSET OF THAT SIZE)


SUBSET  1

GROUP       GSA-
MEAN       32.3009
- - - - - - - - - - -

SUBSET  2

GROUP       LPS-          DLA-          AFD-
MEAN       46.7433       46.9971       48.6261
- - - - - - - - - - - - - - - - - - - - - - - - -
```

Kirk further states that "in order for a comparison to be significant, it must be greater than S . . . [25:91]." The results of the Scheffe S test, based on 1336 observations, are summarized in Table IV. The test shows that the group mean for GSA is significantly different than LPS, DLA, and AFD.

In order to determine why GSA was singled out from the other sources, further analysis of the data was made using SPSS subprogram BREAKDOWN. The complete output from this program can be found in Appendix A. A review of the data

showed that the main reason for the significant difference was due to the speedy response by GSA sources to ROIDs submitted for requests for documentation. As a further check on the validity of this observation, all of the D1 type discrepancy reports submitted by GSA activities were eliminated from the data base and the SPSS Oneway ANOVA program was rerun. The results of this test are summarized in Table V. In this case, the F-RATIO analysis again showed that there was a significant difference and that the means were not equal.

TABLE V

Analysis of Variance for Response Time
(Without GSA D1 ROIDs)

VARIABLE LAGTIME DAY ROID SENT MINUS DAY RECEIVED BACK

ANALYSIS OF VARIANCE

SOURCE	D.F.	SUM OF SQUARES	MEAN SQUARES	F RATIO	F PROB.
BETWEEN GROUPS	3	177271.2952	59090.4316	17.705	0.
WITHIN GROUPS	1041	3474326.3078	3337.4892		
TOTAL	1044	3651597.5625			

The computed F* was 17.705 and the critical F value remained at 2.60 based on $\alpha = .05$, $v_1 = 3$ and $v_2 = 1041$ degrees of freedom. Scheffe's S method revealed that without considering the lost documentation (D1) ROIDs, GSA was still significantly different from the other three sources--in the reverse direction (Table VI). Further analysis of the types of discrepancies will be discussed in more detail later on.

TABLE VI

Differences Among Means of Response Times
(Excluding GSA D1 ROIDs)

VARIABLE LAGTIME DAY ROID SENT MINUS DAY RECEIVED BACK

MULTIPLE RANGE TEST

SCHEFFE PROCEDURE
RANGES FOR THE 0.050 LEVEL -

3.96 3.96 3.96

HARMONIC MEAN CELL SIZE = 108.5277
THE ACTUAL RANGE USED IS THE LISTED RANGE * 4.2075

HOMOGENEOUS SUBSETS (SUBSETS OF GROUPS, WHOSE HIGHEST AND LOWEST MEANS DO NOT DIFFER BY MORE THAN THE SHORTEST SIGNIFICANT RANGE FOR A SUBSET OF THAT SIZE)

SUBSET 1

GROUP	LPS-	DLA-	AFD-
MEAN	46.7433	46.9971	48.6261

SUBSET 2

GROUP	GSA-
MEAN	85.8741

The next question to be answered is whether or not the shipping activities are processing the ROIDs within the 30-day timeframe established in the basic regulation (57:9). To test this hypothesis, a one-sided upper-tail test was constructed where the appropriate decision rule to use when the alternatives are

$$H_0: \mu \leq \mu_I$$

$$H_1: \mu > \mu_I$$

is

If $\bar{X} \leq A$, conclude H_0

If $\bar{X} > A$, conclude H_1

where

$$A = \mu_I + z(1-\alpha)S(\bar{X}) \text{ and}$$

$$S(\bar{X}) = \frac{S}{\sqrt{n}} \quad [33:271]$$

In this instance, $\mu_I = 30$, $\alpha = .05$, $z = 1.645$ (33:Table B-1) and $S(\bar{X})$ is the sample standard deviation of the mean response time.

The test statistic, A, was calculated for each shipping activity and the results are summarized in Table VII.

TABLE VII

Summary of Values Used to Compute Test Statistics and Final Conclusions

Shipping Activity	Parameters					Conclude
	Z	S	n	$\bar{X}$	A	
GSA	1.645	54.2416	1336	32.6009	32.4411	H_1
DLA	1.645	55.1604	1336	46.9971	32.4825	H_1
LPS	1.645	49.9962	1336	46.7433	32.2500	H_1
AFD	1.645	73.7175	1336	48.6261	33.3176	H_1
Overall	1.645	55.4259	1336	42.4618	32.4944	H_1

The conclusion from these tests is that the null hypothesis is rejected in each case; therefore, none of the shipping activities are currently meeting the 30-day criteria.

Analysis of the data using the SPSS subprogram BREAKDOWN and FREQUENCIES by type of discrepancy and type of depot was run to look into the possible causes for this lack of

timeliness.

An analysis of the FREQUENCIES data showed that the overall response time of 30 days for all shipping activities was not met 37.8 percent of the time, and that 14.3 percent of the ROIDs were not answered within 90 days after submission (Table B-1). Further analysis of the data revealed that 54.9 percent of the ROIDs over 90 days were still outstanding when the data was finalized at the sample receiving activities and sent to us. Table VIII summarized the characteristics of the outstanding ROIDs.

TABLE VIII

Summary of Outstanding ROIDs

Depot	Type of Item Shipment Discrepancy (Alpha Code only)								Total
	C	D	M	O	S	T	W	Z	
GSA	4	-	-	8	19	-	5	2	38
DLA	1	-	-	1	2	-	19	2	25
AFD	6	-	-	-	9	-	3	-	18
LPS	3	-	-	8	4	-	7	2	24
Total	14	-	-	17	34	-	34	6	105

GSA sources did not meet the deadline 23.7 percent of the time and 12.7 percent of these were still unresolved by the 90-day point (Table B-2). DLA and LPS activities did not meet the established limit in 45.0 percent and 46.2 percent of the cases submitted respectively. The two categories were also similar in the over-90-day category, with 13.8 percent and

15.8 percent of the cases still unresolved (Tables B-3 and B-4). The AFD did not meet the response time criteria 35.7 percent of the time, and 15.7 percent of the ROIDs fell into the over-90-day category (Table B-5).

Out of the eight overall types of discrepancies, only two categories were answered within the 30-day timeframe. No documentation and technical problem requests were answered in a timely manner 85.4 percent and 83.3 percent of the time respectively (Tables B-6 and B-13). No documentation had a mean response time of 16.8391 days and technical problems had a mean of 22.3333 days (Table C-1).

The reason for the high figure on response rate for no documentation was due to the significant influence of GSA sources, which had a mean of 7.8866 days. However, if the corrective action generated by the response to the base is considered, then the fast response time has little meaning since the inquiries received a negative answer 98.97 percent of the time (Appendix A). In fact, GSA as well as DLA, which has a 40 percent negative response rate, use a rubber stamp or preprinted format to answer the ROID (Figures 6 and 7).

DLA activities were within the time objective for only one type of discrepancy--overages with a mean of 23.8000 days. The other seven categories were between 40.2632 and 71.3913 days (Appendix A).

LPS did not meet the 30-day time limit for any category except technical problems, which was 22.3333 days (Appendix A).

The Air Force Depots answered ROIDs concerning overages

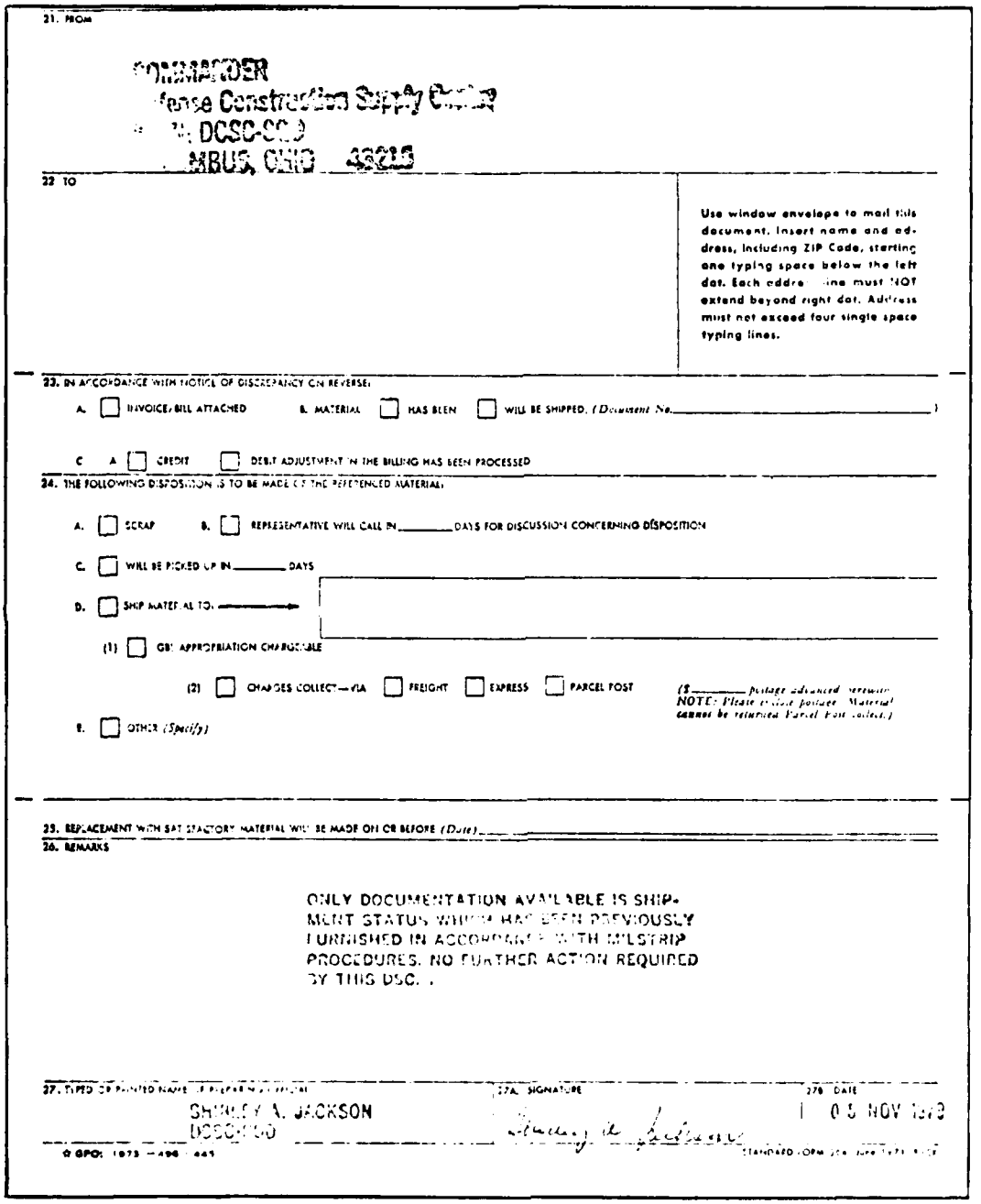

21. FROM

COMMANDER
Defense Construction Supply Center
ATTN: DCSC-SCD
COLUMBUS, OHIO 43215

22 TO

Use window envelope to mail this document. Insert name and address, including ZIP Code, starting one typing space below the left dot. Each address line must NOT extend beyond right dot. Address must not exceed four single space typing lines.

23. IN ACCORDANCE WITH NOTICE OF DISCREPANCY ON REVERSE:

A. ☐ INVOICE/BILL ATTACHED B. MATERIAL ☐ HAS BEEN ☐ WILL BE SHIPPED. (Document No._____)

C A ☐ CREDIT ☐ DEBIT ADJUSTMENT IN THE BILLING HAS BEEN PROCESSED

24. THE FOLLOWING DISPOSITION IS TO BE MADE OF THE REFERENCED MATERIAL:

A. ☐ SCRAP B. ☐ REPRESENTATIVE WILL CALL IN_____DAYS FOR DISCUSSION CONCERNING DISPOSITION

C. ☐ WILL BE PICKED UP IN_____DAYS

D. ☐ SHIP MATERIAL TO: ⟶

(1) ☐ GBL APPROPRIATION CHARGEABLE

(2) ☐ CHARGES COLLECT—VIA ☐ FREIGHT ☐ EXPRESS ☐ PARCEL POST ($_____ postage advanced herewith. NOTE: Please enclose postage. Material cannot be returned Parcel Post collect.)

E. ☐ OTHER (Specify)

25. REPLACEMENT WITH SATISFACTORY MATERIAL WILL BE MADE ON OR BEFORE (Date)_____

26. REMARKS

ONLY DOCUMENTATION AVAILABLE IS SHIPMENT STATUS WHICH HAS BEEN PREVIOUSLY FURNISHED IN ACCORDANCE WITH MILSTRIP PROCEDURES. NO FURTHER ACTION REQUIRED BY THIS DSC.

27. TYPED OR PRINTED NAME OF PREPARING OFFICIAL
SHIRLEY A. JACKSON
DCSC-SCD

27A. SIGNATURE

27B. DATE
05 NOV 1979

☆ GPO: 1973 — 496 — 445

STANDARD FORM 364 (Rev. May 1973)

Figure 6

Example of Defense Logistics Agency
Reply to Requests for Documentation

General Services Administration - Region 5
230 South Dearborn Street
Chicago, IL 60604

Date 6 Jul 79

Reply to Attn of SFSRA

Subject 1348-1

To FB2300 2750TH DMSDR
WPAFB OH 45433

We are returning your inquiry for additional information as indicated below:

( ) Complete MIL/TEDSTRIP Requisition Number: Requisitioner Address Code, Julian Date and Item Serial Number.

( ) Our GBL Number under which shipment was scheduled or made.

( ) Copy of your SF 1348-1, if available.

( ) Copy of your Billing Statement.

( ) Can find no record of your Requisition Number at GCO.

( ) Due to the lapse in time between shipment and report of non-receipt, no adjustment will be issued. Please refer to FPMR Regulations E-21.

(X) Other

Marian D. Reed

Marian D. Reed, Chief
Inquiry and Adjustment Section
Requisition Processing & Control Branch

PLEASE CONTACT YOUR TRANSPORTATION RECEIVING OFFICE, COPIES OF 1348-1, NOT AVAILABLE THIS AGENCY.

Figure 7

Example of General Services Administration Reply to Request for Documentation

and miscellaneous reasons below the 30-day cutoff with 7.5000 and 26.5000 days respectively. However, they were poor performers in the other categories. For example, it took the AF shipping activities 27.3333 days to return a negative response for no documentation 85.71 percent of the time. Overages were answered either negatively, unknown, or not at all 80 percent of the time (Appendix A).

The purpose of the preceding discussion was to point out some of the reasons why the 30-day timeframe was exceeded the majority of the time and to shed a little light on the possibility of the shipping activities meeting the goal, but giving the receiving activity little help in solving their individual problems.

Research Question 2. The types of discrepancies reported by the receiving activities were recoded for analysis into eight general categories: no documents (D1, D2, D3), overages (O1, O2, O3), incorrect items sent (W1, W2, W3), shortages (S1, S2, S3), defective items (C1, C2, C3), misdirected shipments (M1), technical problems (T3, T4), and all those that did not fit exactly into one of the above categories (Z1) and are explained by use of the remarks section. The front side of SF364 lists all the possible discrepancy codes and their meanings (Appendix E). The data were then manipulated by means of the SPSS subprogram FREQUENCIES in order to analyze the frequency distributions of the discrepancy types. When the reasons were combined for all the various shipping activities, the most predominant type of

discrepancy reported was the receipt of shipments without the proper documents or illegible and incomplete documents. A total of 404 cases, or 30.2 percent of the total, were in this category (Table D-1). Looking at the type of discrepancy broken down by type of shipping activity (Table D-6) revealed that General Services Administration (GSA) received 72.0 percent of the ROIDs in this category, far outnumbering the next highest activity, Defense Logistics Agencies (DLA), which had 95 ROIDs (23.5 percent). The Air Force depots (AFD) were the lowest in this category of discrepancy with seven ROIDs submitted, or only 1.7 percent of the total.

The next most common discrepancy reported was the receipt of an incorrect item, with 313 ROIDs or 23.4 percent of the total sample (Table D-1). These reports were sent to local purchase sources (LPS) 38.0 percent of the time and DLA 36.7 percent of the time. GSA was lowest in this category with only 9.3 percent, or 29 ROIDs, submitted by the receiving activities (Table D-8).

Shortages were reported in 18.2 percent of the cases (Table D-1) with LPS contributing to the problem 38.7 percent of the time. DLA was next with 31.3 percent. The lowest was AFD with 7.4 percent of the ROIDs in this category (Table D-9).

The next significant category reported by the sample bases were reports of overages. A total of 215 discrepancies reported, or 16.1 percent of the total, were of this type. The LPS were responsible for this problem area 72.6 percent of the time, while the AFD were lowest with 4.7 percent. GSA

and DLA were approximately the same, with 11.2 percent and 11.6 percent respectively (Table D-7). These four categories --no documentation, incorrect items sent, shortages, and overages--accounted for 87.9 percent (1175 cases) of the ROIDs submitted by the sample receiving activities. The other four areas were not reported in very significant numbers (Table D-1).

Looking at the individual shipping activities revealed how many of each type of discrepancy were sent by the receiving activity to a particular shipping activity.

For GSA, the majority of the ROIDs were for no documentation. Out of 426 ROIDs submitted, 68.3 percent were in this category. The next highest category was shortages, with 12.9 percent of the reports. The remainders were less than 7.0 percent each (Table D-2).

For DLA, the most significant problems were incorrect items (33.1 percent) and no documentation (27.4 percent). The least significant area was misdirected shipments with only one case reported out of 347 total (Table D-3).

The LPS had three significant problems reported: overages (34.8 percent), incorrect items (26.6 percent), and shortages (21.0 percent). All of the ROIDs submitted for technical problems were sent to LPS, but this category only accounted for 1.3 percent of the discrepancies reported (Table D-4).

Receipt of incorrect items was the major problem area reported by receiving activities to the Air Force depots. Out of a total of 115 ROIDs submitted, 50 (43.5 percent)

of them were in this category (Table D-5).

Each of the different shipping activities, except GSA, had problems with receipt of incorrect items. GSA and DLA received an overwhelming majority of the receipts with no documentation.

Research Question 3. For this portion of the research, the data base of interest was that maintained at the DESC depot level. Specifically, we extracted the data based on those SF364's submitted by DESC customers which were identified by a type document code 7 in card column 7 of the data base, which indicates a report from a customer in the field (Appendix F). The extraction was done using a locally devised program (41). By interrogating the files in this manner, 2599 records were selected. Further analysis revealed that numerous reports from other than the Military Services were selected such as reports from the Federal Aviation Agency (FAA), Foreign Military Sales (FMA, FMN, FMF), and the various DESC depots (SNE, NNE). These reports were outside the purview of this study and were not used for the statistical analysis. This left a total of 2058 observations for our use. It should be noted at this point that the data base contained several errors which were corrected prior to any analysis. The most common errors were due to erroneous entries in the field for the service, type of discrepancy reported, and cause code. For example, only two letters were entered for the service instead of three (AV instead of NAV), an invalid discrepancy such as G1 or O1 was entered, and cause codes such as ER, TI,

and ZI were utilized, but were not listed. In the case of cause code ZI, it was determined from further research that the cause code was Z1. Even though this is not listed, the technician said the list was not all-inclusive and could be expanded (22). The total number of errors in these three fields noted was 24 and this translated into a 1.1 percent error rate.

The first step taken in the analysis of this research question was to determine the various categories of causes of shipment discrepancies as determined by DESC technicians. In this initial stage, the SPSS subprogram FREQUENCIES was utilized to determine the number of occurrences of each cause code applied to a ROID. The analysis revealed that 15 actual cause codes were used. Table H-1 summarizes the types and the absolute and relative occurrences of each cause code. Out of the total 2058 ROIDs submitted, 17.6 percent of them had no cause code listed. This fact was discussed with the technicians, and the interviews revealed that prior to 1 January 1980, the computer would accept a blank input for this field. In the minds of the technicians, no entry in this field was the same as an undetermined cause. Currently, an entry must be made in the field or the computer will not allow the file to be closed out (22; 37; 41).

The overwhelming majority of the causes for the discrepancies reported were entered as warehouse error (WE). This cause code alone accounted for 72.3 percent of the sample. As mentioned above, the next largest cause code was

undetermined cause, which included those encoded as cause code CD, or a blank field. The accumulated total was 18.3 percent. The third area of significance was other (OT), with 4.2 percent. These three cause codes accounted for 94.8 percent of all causes.

As a corollary to the above analysis, all the types of discrepancies for the ROIDs sent to DESC were also tabulated by use of the SPSS subprogram FREQUENCIES. The data is summarized in Table H-2. The majority of the ROIDs submitted were to report shortages, a category which accounted for 49.6 percent of the ROIDs. The next significant category was that incorrect items were shipped to the receiving activity 37.3 percent of the time. Overages accounted for 6.6 percent of the ROIDs submitted during the sample period. These three types of discrepancies covered 93.5 percent of the types of discrepancies reported.

The next stage of the analysis was to cross-tabulate the two categories, type of discrepancy with cause, to determine which cause was the most significant for each of the types of discrepancies reported by the receiving activities. There were ten general categories of discrepancies encoded by DESC technicians rather than the eight found in the analysis of the sample base data. This difference arises because the technicians have the ability to recode the type of discrepancy to make it more meaningful to them, and because the codes authorized by DESC regulations are more extensive than those found in the SF364. Appendix F has the complete list of codes.

In this particular case, the two additional codes used fell under storage standards (F1, F2) and billing requests/errors (BR). However, no technical problems (T1-T6) were reported, which left nine categories of discrepancies.

The fifteen categories of causes plus blank entries were cross-tabulated with the nine categories of item shipment discrepancies. Keep in mind that this data included all the Military Services, not just the Air Force.

In the case of reported short shipments (Table H-3), the cause was attributed to warehouse errors in 72.7 percent of the cases, and the cause was undeterminable another 23.3 percent of the time. Along with other causes (2.7 percent), these three causes accounted for 98.7 percent of the discrepant shipments. Similarly, the causes for overages (Table H-4) followed approximately the same distribution. Warehouse errors accounted for 77.9 percent of the problem shipments, with undetermined (17.6 percent) and other (1.5 percent) accounting for another 19.1 percent of the discrepancies, for a total of 97.0 percent.

Receipt of an incorrect item (Table H-5) and receipt of an item which was defective in some way (Table H-6) had the most diverse list of causes. However, warehouse errors were attributed to 79.3 percent of the incorrect items and 6.8 percent of the defective items shipped to military activities. The cause could not be determined 20.4 percent of the time for defective items and 10.5 percent of the time for incorrect items. The most significant cause for defective items were

included under the category other (27.1 percent).

The remaining five categories of item shipment discrepancies accounted for only 3.6 percent of the ROIDs submitted during the sample period. The most significant causes of misdirected shipments (Table H-7) and billing errors (Table H-8) were warehouse errors (65.2 percent) and undeterminable (60.0 percent) respectively. Four causes were listed (Table H-10) as the most probable reasons why a receiving activity did not receive the required documentation: warehouse error (42.9 percent), contractor nonconformance (28.6 percent), undetermined cause (21.4 percent), and other (7.1 percent). The category encoded as unspecified reasons (Table H-9) includes codes Z1 through Z8. In this area, 70.9 percent of the causes were attributed to contractor nonconformance (29.0 percent), were undeterminable (29.0 percent), or reported receipt of an incompatible item (12.9 percent). Only two reports attributable to storage standards were received. One cause was listed as warehouse error, the other as expended shelf life (Table H-11).

The causes for each of the discrepancies are determined by several sections through the DESC complex. However, the majority of the causes are determined by the technicians working in the Reports Central Section (SQRC) of the Quality Assurance Branch. The others go to the Quality Technical Section (SQRA) and Inventory Management (OSI). In order to determine how the probable causes were determined, discussions were held with the various technicians and the section

supervisor (5; 7; 11; 13; 20; 22; 37). As a result of these interviews, a process flow chart (Appendix I) was created which shows the flow of a ROID through the system and the decision-making process which takes place. The process starts with the receipt of the ROID at DESC. The technicians who work on the ROID are generally guided by type of discrepancy, various dollar criteria, and whether they consider the ROID a new or a repeat report. The section supervisor is readily available to aid the technicians with problems which do not fall into the usual routine. Given that a particular ROID is not unusual in any manner, the chart could be used as an aid for showing the receiving activity how the ROID flows through the system, as well as a ready reference for technical and managerial personnel.

In the final stage of the analysis, the ROIDs submitted by the Military Services were first sequenced by Federal Stock Number (FSN) and then scanned to find those situations in which the same FSN was recorded at least four times during the sample period, since an indication of four or more report discrepancies would suggest a significant problem requiring management attention. The review of the data revealed that twelve FSNs met this criteria. The entire 30-month data base was checked to determine what additional information was available on those particular FSNs. Table IX summarizes the pertinent data from the historical microfische files.

The Closed Document Files were then checked and the copy of the ROIDs for each of the twelve selected FSNs was

TABLE IX

Summary of Data Used to Determine Potential Problem Areas

Federal Stock Number	Total ROIDs Received Over 30-month Period			
	All Sources	Military Services	Discrepancy	Cause
5805-00-422-4609	30	16	S1	CN,WE,CD
5805-00-422-4610	29	14	S1,O1,C1	CN,WE
5805-00-506-8299	13	12	S1,C1,W1	WE,OT
5820-L903018R	8	8	S1	WE
5910-00-730-1929	5	4	O1	WE
5935-00-946-9144	23	19	Z8,C1	CN,IE
5935-01-005-3579	100	72	S1,W1,O1,M1 Z8,Z1,D1	WE,OT,CD, EE,CN
5945-01-047-5056	9	9	S1,W1	WE
5960-00-840-5465	48	42	S1,W1,O1,Z8	WE,CN,OT, IE
5961-00-794-6198	19	15	S1,W1	WE,CN
5961-00-827-7504	9	8	S1,Z8	WE,TE,TI, IE
5965-00-755-4656	33	26	S1,W1,O1	WE,CN

removed. This became a time-consuming task because the reports were filed only by Federal Stock Class (FSC) and by month. In addition, they were not filed by close-out date, which meant that the entire FSC file had to be screened to find the selected FSN sample. Many of the files contained several hundred ROIDs.

Each ROID selected was subjected to a critical inspection for completeness. The technicians were then asked to comment on the completeness of each ROID within their area of responsibility (each technician is assigned a particular FSC), and if the information on the ROID, as submitted, was sufficient to complete a meaningful analysis. There were several items which they all agreed were necessary (5; 7; 11; 20; 22; 37). First, correct entries in block 3 (the addressee block) aided in speeding up the process. There were a variety of addresses used by the receiving activities of the different services, and if they were addressed the same way on the envelope, they might go to the wrong office, causing a delay in processing. For example, on FSN 5935-01-005-3597, an Army activity addressed the ROID to an incorrect office:

CDR, Defense Electronics Supply Center
Attn: DESC-NS
Dayton, OH 45444

while two Air Force activities mailed their ROIDs to

Defense Electronic Supply Center
Attn: DESC-SMS
Dayton, OH 45444

and Defense Electronics Supply Center/NPR
1507 Wilmington Pike
Dayton, OH 45444

The correct office is DESC-SQRC; however, the regulation does not note this fact.[5]

Another common problem is incorrect distribution of the ROIDs by the bases. They are not sending in the original copy of the ROID to the Reports Control Section. If the technician received a carbon copy, it is immediately suspect and must be checked out to determine its real status. The manual clearly states that the original plus one copy will be sent to DESC (57:10).

The most important blocks on the ROID are the date of preparation (Block 1), and GBL or Manifest Number (Block 7), the document number (Block 8), and all the correct information required in Blocks 9-14. The emphasis is on the word correct because numerous ROIDs reviewed by the authors were extremely confusing. The most common errors in our sample were that the discrepancy code did not agree with the remarks included in Block 15, using the incorrect action code in Block 14, and not following the correct followup procedures. This last point was significant. Unless the ROID is identified as a followup, it might be treated as a new report, depending on the procedures used by the receiving activity. The governing regulation is specific on this point. It states:

> Where an action activity is nonresponsive to an SF364 within the prescribed timeframe, the reporting activity will initiate follow-up action by dispatch of a copy of

---

[5]The new AFR 400-54 does include addresses, but they are specified to be used for packaging problems (58:Encl.2).

> the original SF364, annotated to read "FOLLOWUP" in a statement above the date block. The date of the followup will be included in the statement [57:9].

The most common procedure used by receiving activities for followup ROIDs is to change the date in Block 1 and then make a copy. Accordingly, the technicians were usually alerted to the possibility that the report was a followup even though it was not properly annotated since the report was a machine-made copy. However, because of the research effort required, delays in processing ROIDs were common.

Another significant problem area is the receipt of illegible ROIDs. At times it was extremely difficult to read some of the critical information such as the document number and the Federal Stock Number. In most instances, this can be directly related to the non-receipt of the original copy.

The technicians were all in agreement that the remarks section was an invaluable aid in helping to determine the cause of a discrepancy. For example, on a ROID coded C1 for FSN 5805-00-422-4610, the activity included the part number, the fact that the item contained a hidden type discrepancy, and was beyond economical repair. The additional information allowed the technician to make a better determination of the cause. However, some information contained in the remarks section was superfluous. A common example of this can be found on numerous ROIDs coded S1, where the total cost (Block 13) was below $100.00 and the activity requested credit. The regulation used by the Comptroller Division,

DOD 4000.25-7-M, clearly states that credit will not be granted in this situation (44:A2-2.1). The accounting technician who handled Air Force cases stated that this regulation should be common knowledge to all fund managers at Air Force activities (16). Another common use of the remarks section is to request that items which are received short be shipped. Commonly, the activity just uses action code 1D or 1F in Block 14. However, DESC is not authorized to ship replacements, and it is the activity's responsibility to resubmit a new requisition (22).

Many of the ROIDs submitted were probably for information purposes only; however, it is DESC policy that unless the customer states this fact, an answer will be provided. One Air Force activity at Loring AFB, Maine used the remarks section for this purpose. Other activities used the remarks section to indicate the report is a followup for an unfilled requisition. For example, a report from Selfridge ANG Base, Michigan noted that their computer had cancelled the requisition for FSN 5805-00-422-4610 for non-receipt after three followups; but these are local base procedures and the meaning of the followup is different.

One of the best uses of the remarks section was noted on a report coded Z1 from Keesler AFB, Mississippi for FSN 5905-01-040-7949 in which they annotated that this was not the first time they had received an incorrect item. This alerted the technician and the problem was handled as a repeat discrepancy.

The previous discussion illustrates the fact that the technician needs certain information to determine the status of a discrepancy. The consensus of the technicians was that the information provided by the sample ROIDs was sufficient either for them to determine the cause directly or for another section to determine the cause. However, neither the file of ROIDs nor the 30-month data history allowed anyone to determine what corrective action was taken, except for that rare case in which a note from another office was attached. For example, we found on a note attached to a ROID for FSN 5905-01-040-7949, which stated that the buyer had made a transposition error and that all the stocks had been checked. In the majority of the cases, the ROID was filed without ever leaving the Reports Control Section (22). The most common case is the handling of shortages. If the ROID indicates that the shipment was received short, the value is under $100.00, and there is no indication that it is a repeat discrepancy or followup from that activity, the action taken is to enter the ROID data into computer files with cause code WE, stamp the SF364 with a remark of "no credit granted" and return the ROID to the sender. A courtesy copy is sent to DESC/OSI (Inventory), but no feedback is received as to the corrective actions (13; 22). A copy is also sent to DESC/TMQ[6] (warehouse) with the same results. If the item had been shipped from another

---

[6]DESC is currently phasing out the depot activities at Dayton. At this time the majority of the items have been transferred to other locations, so this practice will soon cease.

location, that location is not sent a courtesy copy. In this case, it is assumed that the customer sent the required copy to the shipper. However, neither the customer nor the technician at DESC is notified of any corrective action which has been taken by any of the other activities involved (3; 16). For the most part, each shortage report is assumed to be a random warehouse error.

Evaluating whether or not the corrective actions taken in response to the receipt of a ROID actually led to the prevention of a recurrence of the discrepancy was made more difficult because of the lack of a centralized repository for all the materials connected with the initial ROID and the lack of documented actions. As noted in the process flow chart, no feedback from SRQA, TMQ, CAGFR or OSI on the corrective actions taken is received by SQRC. Furthermore, the files in each of these activities do not generally contain the information required to determine if the item was tracked after the corrective action was taken (3; 16; 38). The ROID files in the Comptroller's Office (CAGFR) are filed in separate folders by document number which would allow the accounting technicians to spot potential trends at a particular receiving activity, but they are not used for this purpose and no corrective actions are recorded (16). The ROID files maintained by the Inventory Management Section (OSI) are in Federal Stock Number (FSN) sequence. The technicians do use the files to track continuing discrepancies and significant inventory problems, but when a problem is noted, the final

corrective action is not recorded (3). The copy of the ROID sent by the receiving activities to the shipping location (TMQ) and DESC are funneled through the Reports Control Section (SQRA) to avoid possible duplication and to check for proper documentation. When the reports are returned, a location check is made by interrogating the computerized bin location files. If any unusual bin location problem is noted, a physical check of that location is made. The corrective action taken is not recorded and the ROIDs are only maintained for approximately three months after they are received (38). Another relevant fact noted in the review of warehouse procedures was that they do not keep any of the hard-copy documentation (DD Form 1348-1) for Parcel Post shipments for more than three days (38). This documentation is necessary for taking corrective action on several types of ROIDs.

In summary, in all these situations, no corrective actions are recorded. However, an attempt was made to determine if ROIDs do lead to prevention of recurring discrepancies by utilizing the twelve FSNs selected and the 30-month data history file for discussion with the technicians.

First, we determined how many ROIDs were submitted after the date of the final ROID on each particular FSN in our original four-month sample of DESC ROIDs. Then we reviewed the period covered from that date through 25 March 1980. As noted in Table X, the date of the last ROID varied by month. For example, we started counting from day 9233 (21 August 1979) on FSN 5961-00-827-7504, and from day 9271

(28 September 1979) on FSN 5960-00-840-5465. The data collected are summarized on Table X.

An analysis of this data revealed that only two of the FSNs had no additional discrepancies filed against them up through 25 March 1980. On the other hand, five of the FSNs continued to show five or more discrepancies of the same type, especially shortages and misidentified items. The cause most commonly listed was warehouse error (WE). However, as discussed previously, no records of correction actions are available for further research. Therefore, the corrective action taken in response to a ROID could not be cross-tabulated with either the type of discrepancy nor the probable cause.

The information gathered and analyzed in this portion of the study enabled us to reach several significant conclusions about the effectiveness of the current ROID program. This will be discussed in the next chapter along with some recommendations which could lead to the improvement of the system.

TABLE X

Summary of Data Used to Determine Effectiveness of Corrective Actions

Federal Stock Number	Julian Date of Last Roid	Total ROIDs Received After Last ROID Submitted in Base Sample			
		All Sources	Military Services	Discrepancy	Cause
5805-00-422-4609	9269	0	0	--	--
5805-00-422-4610	9269	5	5	S1,O1	WE,CN
5805-00-506-8299	9270	2	1	S1	WE
5820-L903018R	9260	1	1	S1	WE
5910-00-730-1929	9268	1	1	O1	WE
5935-00-946-9144	9265	7	5	Z8	CN,IE
5935-01-005-3579	9242	18	9	Z1,W1,S1	OT,WE
5945-01-047-5056	9263	4	4	S1,W1	WE
5960-00-840-5465	9271	9	5	S1	WE,IE
5961-00-794-6198	9262	6	4	S1	WE
5961-00-827-7504	9233	0	0	--	--
5965-00-755-4656	9255	6	5	O1,S1,W1	WE,CD

CHAPTER IV

CONCLUSIONS AND RECOMMENDATIONS

The main focus of this study was on the ability of the shipping activities which select, package, and transport the supplies necessary for the Military Services to accomplish their missions to take timely corrective actions on discrepancies identified by the receiving activities. In other words, to determine the shippers' quality of performance. Bowersox summed up the main idea when he stated:

> Performance quality relates to how well the overall logistical task is completed with respect to damages, correct line items and resolution of unexpected problems. There is no point in speedy and consistent delivery of a damaged product or the wrong order. Thus quality relates to the maintenance of low error rates and resolution of problems over time [6:21].

The overall measures of performance used in this study were timeliness of reports, proper identification of causes, and the effectiveness of corrective actions taken. The question of timeliness was based on a statistical analysis of a sample population of Reports of Item Discrepancies (ROIDs) submitted by several Air Force activities. The questions of determining the types and causes of discrepant shipments and the actions taken to correct the problem were based on samples taken from both the receiving and the shipping activities which were represented by the Air Force sample and Defense Electronics Supply Center (DESC) records.

Timeliness

Conclusions. The statistical analysis of the data revealed that the shipping activities were not meeting the 30-day timeframe required by the regulation. The overall processing time was 42.4618 days. Even if an average mailing time of 11 days is subtracted from the mean response times, the average is still approximately 31 days.

Analyzing timeliness by type of discrepancy reported shows that except for replies to requests for documentation and misdirected shipments from all the shipping activities and responses concerning technical problems from the local purchase sources (LPS), the mean response time minus the average mailing time was actually over 45 days (Table C-1).

The response that the shipping activity rendered must also be considered. A positive response would indicate that management at the receiving activity felt the action taken by the shipping activity to identify the cause of the discrepancy was adequate and that the appropriate corrective measures had been applied. The positive response rate, according to the receiving activities, was approximately 40.8 percent. This means that about 59.2 percent of the time, the receiving activity did not perceive that they received a positive reply or just didn't know what the shipper had accomplished to solve their particular problem (Table C-3). Examples already cited in Chapter III included replies from the General Services Administration (GSA). They took only 7.8866 days to reply to a no document type discrepancy, but only answered 3 out of

291 cases positively.

Another example of this situation can be found by reviewing the replies to ROIDs on incorrect items. One would expect that processing these reports would take more time, but the effort would lead to a positive reply to the receiver; however, for Defense Logistics Agency (DLA) activities, the rate was only 20.8 percent, for GSA the rate was 37.9 percent, and for Air Force depots (AFD) the rate was 32.0 percent. On the other hand, the LPS shippers had a positive reply rate of 89.9 percent. The commercial suppliers almost always sent a positive reply to the customer, whereas the other sources, who are not judged using the profit criteria, were much less responsive.

The reasoning behind the 30-day time limit is not stated in the regulations governing submission of a ROID. Why this particular timeframe was selected could not be determined from any of the discussions held during the period covered by this study. In fact, the technicians and managers at DESC were not aware of what their response times were as no studies have ever been completed in this area (21; 31).

Since all types of discrepancies reported require differing degrees of effort for problem resolution (see Appendix I), attempting to meet the 30-day time limit may result in the wrong cause being identified and the incorrect corrective action being taken. Therefore, the problem may continue to recur in the future. For instance, it would be far more beneficial in the overall accomplishment of the mission to

insure that lasting corrective action is taken on a discrepancy which takes 42 days to process, than to inadequately solve the problem in 29 days to meet the 30-day timeframe. Care must be taken that the means of achieving the goal of reduced discrepant shipments does not become an actual goal in itself.

Recommendations. The shipping activities should take samples of the ROIDs they receive on a recurring basis to determine what their processing times are for each type of discrepancy. Tolerance limits should be computed for the 30-day standard. Tolerance limits are acceptable variations from desired conditions or targets, and "their prime purpose is to tell the manager where he needs to take corrective action [30:385]."

Because there are instances in which the 30 days is not adequate for correction of discrepancies, the Standard Form 364 should be modified to include blocks which would indicate whether the returned ROID is a final or an interim report. This modification would enable shippers to send an interim report to receivers in those instances when more than 30 days are required to correct the discrepancy and to send followup replies at stated intervals. This procedure would require the manager to look at each situation more carefully, but it would not put pressure on the manager to come up with a solu- within 30 days just to meet an arbitrary deadline. In , the receiving activities would be kept abreast of through the feedback.

As a final recommendation concerning shipping activities, management should examine the 30-day time limit for processing a ROID to determine if the limit is reasonable. This study could begin with analysis of the extensive data bases to determine processing times for ROIDs followed by determination of why reports take more than the 30-day limit in order to justify changes to the limit.

The requirement for submitting a timely report by the receiving activity must also be considered at this point. All the receiving activities should develop a program to track the ROIDs they submit and to ensure that followup reports are sent as required. AFM 67-1 has recently been updated to help in this area, but most of the Air Force receiving activities we contacted do not have an overall ROID-tracking program at this time.

The SF364 should also be modified to include blocks to indicate whether the ROID is an initial or followup report. The revised SF364 (Appendix E) does include a new action code 1H to indicate that the ROID is for informational purposes only.

Major Types of Discrepancies

Conclusions. The study revealed that the types of discrepancies did fall in several significant areas and that each shipping activity had several types of discrepancies reported more often than others. The data presented in Tables D-1 through D-5 and H-2 revealed that overall, there were four types of discrepancies which dominated all the other categories.

Two of the discrepancies, incorrect item shipments and short shipments, plagued each of the four shipper categories. No documentation and overages were also significant in four out of five cases. In general, the shippers have significant problems in similar areas. The data for DESC was consistent with this conclusion. Table XI summarizes the data collected and indicates the significant areas.

TABLE XI

Summary of Types of Discrepancies
By Percentages of Occurrence

Type of Discrepancy	Shipping Activity					
	All Sources	GSA	LPS	AFD	DLA	DESC
No Documentation	30.2*	68.3*	2.5	6.1	27.4*	0.7
Overage	16.1*	5.6*	34.8*	8.7	7.2*	6.6*
Incorrect Item	23.4*	6.8*	26.6*	43.5*	33.1*	37.3*
Shortage	18.2*	12.9*	21.0*	15.7*	21.9*	49.6*
Defective	4.8	2.6	6.0	12.2*	3.5	2.9*
Misdirected	0.8	0	0	8.7*	0.3	1.1
Unspecified	6.0	3.8	7.8*	5.2	6.6	1.5
Technical	0.4	0	1.3	0	0	0

*Four most significant discrepancies reported
Note: Figures may not add up to 100% due to rounding.

The information gathered suggests an application of Pareto's Law, which states "the significant elements in a specified group usually constitute a relatively small portion of the total items in the group [40:27]" and identifies areas for increased management attention. Managers can become

overloaded with information, which may or may not be useful to them, and may attempt to use data which are not in a format that is readily digestable. Voich, et al. suggest that too many reports or too much information on a single report may "hamper the use of reports or even discourage their use entirely [67:230]." In this study, several cases or overload on reports of questionable value were noted.

For example, the regulation that superceded AFR 67-16, the new AFR 400-54, requires that a ROID be submitted in all cases of lost documentation (57:7; 58:6). As noted earlier, the documentation the receiving activity is requesting (in most cases, a copy of DD 1348-1) is not retained by the shipper for a long enough period of time. Further, most of these reports are for information purposes only. A similar situation can be found in the submission of ROIDs for shortages under $100 to DLA shipping activities. These reports are for information purposes only, but are handled just like any other report.

The authors of this study agree with experts in management concerning the implementation of the principle of management by exception. Several authors have suggested that the use of this principle would allow managers more time to concentrate on the more important decisions and, thereby, reduce the possibilities of overloading (30:282; 67:243).

The reports currently generated for use by the Reports Control Section (DESC-SQRC) are not in a format which allows the technicians or managers to readily determine potential

problem areas. The reports are quite lengthy and do not include data on any ROIDs which have been closed out longer than 45 days. This limits the data available for trend analysis. Although the lists can be produced in several sequencies, i.e. Federal Stock Number, discrepancy code, or cause code, they do not include meaningful summary data. For instance, it is impossible to determine either the total number of ROIDs processed during the month or the total number of each type of discrepancy received without manually counting the lines on each page. It only lists the total line items and dollar values (13; 48).

Recommendations. Each shipping and receiving activity should initiate programs to determine the extent of the item shipment discrepancies which seem to be the most significant in their respective areas. They should not concentrate just on shortages, leaving the other problems unattended. For example, GSA should investigate the reasons for its extremely poor documentation rate. DLA, AFD and LPS should investigate their common problem area of incorrect shipments. As a minimum, management should look into each area identified in this study as significant to determine if their individual shipping activity is having the same problems as the overall figures indicate. For example, DESC does not have a significant problem with documentation, but other DLA activities do. AFD, on the other hand, should look into the overall problem of misdirected shipments, which are the highest of any shipper.

In order to reduce the overload of manually processing all the ROIDs which are currently being submitted, the possibility of converting some of the reports to a mechanized format should be evaluated. For instance, the majority of the reports on documentation (D1-D3) and misdirected shipments (M1) are for information purposes only. Unless the documentation is required for some significant purpose, i.e. classified item or recurring problem, or the receiving activity needs shipping directions, little action can be taken. These reports can be encoded on a punch card and transmitted electrically to the shipper. A recurring management report should then be developed to report any problems on an exception basis. A similar mechanization of reports of shortages or overages for which the base will not receive credit or, in the case of overages, does not wish to return could be encoded, transmitted and tracked in the same manner as suggested for documentation and misdirected shipment discrepancies. If the extended codes currently utilized by DESC (Appendix F) are combined with those currently listed on the ROID (Appendix E), it might be possible to reduce the manually reported discrepancies even further.

As noted earlier, the reports currently in use by DESC are not readily digestable for the manager to determine the problem areas without using a combination of reports and microfische. Programs such as those developed for this study could be utilized more effectively by a manager.

Determination of Causes and Corrective Actions

Conclusions. The primary use of the Standard Form 364 (SF364) and the entire ROID program is to determine the causes of certain types of discrepancies and to take the necessary corrective actions to prevent recurrence of the same type of problem. This is the primary function of any feedback and control system. "Control is the use of feedback loops to identify and correct deviations from desired system behavior [26:73]." The desired output in this case is a shipment without any discrepancies. The ROID is the document which allows comparison of the actual output with the desired output. From this information, one can determine if the performance was satisfactory or not. Figure 8 illustrates this point (26:Fig.5-1).

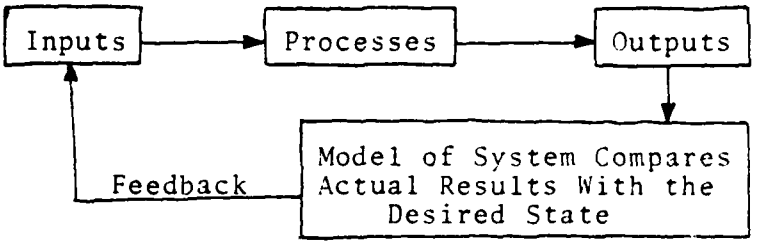

Figure 8

Control and Feedback System

The major conclusion of this study, based on the sample information gathered, is that the current use of the ROID as a tool in determining the cause of the item shipment discrepancy is questionable. In the majority of the cases,

the cause is entered into the computer records without any additional research. For example, misdirected items are usually attributed to warehouse errors (WE). No records are cross-checked to determine if the cause could have been for any other reason. The majority of shortages under $100 with dissimilar Federal Stock Classes (FSC) are entered into the computer as warehouse errors and copies of the ROIDs are then sent to the warehouse. All such reports are considered random occurrences by the technicians (22; 37; 38).

There are no formal feedback channels between sections at DESC. The ROID data base is not updated later if the reason for any individual ROID is actually found to be other than the one entered originally (22). All the managers were in agreement that there should be some type of crossflow (3; 16; 22; 38).

There was even less information available on corrective actions taken as a result of any particular ROID or group of ROIDs unless the item went to the Quality Technical Branch. They do maintain a jacket file by FSN with all the information concerning a particular ROID. However, these files are maintained on only a few FSNs.

Several of the technicians noted that they could make better determinations of certain discrepancies if they had a copy of the original DD Form 1348-1 (DOD Single Line Item Release/Receipt Document). At the current time, the regulation directs the receiver to send copies to both the Item Control Point, i.e. DESC SQRC, and the shipping point,

i.e. DESC TMQ (57:10; 58:9). This has caused more confusion and erroneous submissions by the receiving activities. At times this has also increased the delay in proper processing.

Recommendations. The cause of the discrepancy should not be entered in computer files until it has been verified by the activity responsible for the alleged discrepancy. The files of the activities should all be revised to a Federal Stock Number by receiving activity, by close-out date sequence, especially those in the Reports Control Section. This final step would allow the technicians to note any trend of discrepancies by stock number or receiving activity.

Records of corrective actions taken should be recorded on the ROID so that it can be determined if the appropriate corrective action had been taken to prevent the recurrence of the discrepancy. It would also be useful as a "lesson learned" file which could be used to institute a crossflow program among the various managers at each shipping activity and between shipping activities.

It is also recommended that all required copies of the ROID be sent to the ICP, along with a copy of the DD 1348-1, and that the ICP make the required distribution.

Recommendations for Further Research

The most important area for further research would be in confirming the conclusions reached in this study by applying our methodology to a larger population of shipping and receiving activities.

Next, the area of standards should be researched. Michaels has stated that "standards constitute early warning signals rather than reports of results which may be undesired and irreversible [30:385]." The only standard noted in this study was the 30-day time limit put on ROIDs, but even this was not checked. Further research should be directed at establishing some type of standards and tolerance levels to guide managers in determining whether or not the problems reported via the discrepancy report system are being corrected. However, we want to caution future researchers to avoid setting a standard based on the total number of discrepancy reports received and the total number of shipments made. This figure can be misleading. For example, a particular shipping activity might have a low overall discrepancy rate utilizing this formula. This could obscure the presence of a highly significant discrepancy of large dollar value or one which continually impairs the primary mission of the receiving activity.

Finally, it was noted at the very beginning of this study that no figures were available on the costs of processing a ROID and research is needed in this area. Good management practice would indicate whenever the cost of processing a ROID exceeds its potential benefits, that particular ROID should not be processed. It is envisioned that this type of cost/benefit information could reduce, for example, the number of discrepancies reported for informational purposes and reduce management overload.

APPENDIX A

SPSS SUBPROGRAM BREAKDOWN STATISTICS FOR SHIPPER'S RESPONSE TIME

DESCRIPTION OF SUBPOPULATIONS

CRITERION VARIABLE LAGTIME DAY ROID SENT MINUS DAY RECEIVED BACK
BROKEN DOWN BY SHIPPER ACTIVITY TO WHICH ROID WAS SENT
BY DISCREP TYPE OF SHIPMENT DISCREPANCY
BY RESPOND ANSWER FROM THE SHIPPER TO THE BASE

VARIABLE	CODE	VALUE LABEL	SUM	MEAN	STD DEV	VARIANCE	N
FOR ENTIRE POPULATION			56729.0000	42.4618	55.4259	3072.0300	(1336)
SHIPPER	1.	GSA-GEN SER ADMIN	13888.0000	32.6009	54.2416	2942.1557	(426)
DISCREP	1.	NO DOCUMENTATION	2295.0000	7.8866	4.0748	16.6043	(291)
RESPOND	0.	NEGATIVE	2267.0000	7.8715	4.0922	16.7465	(288)
RESPOND	1.	POSITIVE	28.0000	9.3333	1.1547	1.3333	(3)
DISCREP	2.	ALL OVERAGES	2531.0000	105.4583	76.5228	5855.7373	(24)
RESPOND	0.	NEGATIVE	0.	0.	0.	0.	(2)
RESPOND	1.	POSITIVE	1013.0000	77.9231	47.9504	2299.2436	(13)
RESPOND	2.	UNKNOWN	1518.0000	168.6667	69.8516	4879.2500	(9)
DISCREP	3.	INCORRECT ITEMS	1949.0000	67.2069	70.8017	5012.8842	(29)
RESPOND	0.	NEGATIVE	397.0000	49.6250	83.3374	6945.1250	(8)
RESPOND	1.	POSITIVE	871.0000	79.1818	41.9591	1760.5636	(11)
RESPOND	2.	UNKNOWN	681.0000	68.1000	88.2427	7786.7667	(10)
DISCREP	4.	ALL SHORTAGES	5092.0000	92.5818	75.1040	5640.6182	(55)
RESPOND	0.	NEGATIVE	247.0000	41.1667	32.4556	1053.3667	(6)
RESPOND	1.	POSITIVE	644.0000	42.9333	35.4733	1258.3524	(15)
RESPOND	2.	UNKNOWN	4201.0000	123.5588	77.1163	5946.9207	(34)
DISCREP	5.	DEFECTIVE ITEMS	1023.0000	93.0000	66.9791	4486.2000	(11)
RESPOND	1.	POSITIVE	61.0000	61.0000	0.	0.	(1)
RESPOND	2.	UNKNOWN	962.0000	96.2000	69.7102	4859.5111	(10)
DISCREP	7.	UNSPECIFIED DISCREPS	994.0000	62.3750	44.0059	1936.5167	(16)
RESPOND	0.	NEGATIVE	118.0000	59.0000	0.	0.	(2)
RESPOND	1.	POSITIVE	70.0000	70.0000	0.	0.	(1)
RESPOND	2.	UNKNOWN	810.0000	62.3077	49.1314	2413.8974	(13)

SHIPPER	2.	DLA-DEF LOG AGENCY	16308.0000	46.9971	55.1604	3042.6676	(347)
DISCREP	1.	NO DOCUMENTATION	3971.0000	41.8000	34.2440	1172.6511	(95)
RESPOND	0.	NEGATIVE	1747.0000	45.9737	48.7273	2374.3506	(38)
RESPOND	1.	POSITIVE	2191.0000	39.1250	19.6506	386.1477	(56)
RESPOND	2.	UNKNOWN	33.0000	33.0000	0.	0.	(1)
DISCREP	2.	ALL OVERAGES	595.0000	23.8000	39.5021	1560.4167	(25)
RESPOND	0.	NEGATIVE	115.0000	11.5000	14.0890	198.5000	(10)
RESPOND	1.	POSITIVE	287.0000	41.0000	38.7083	1498.3333	(7)
RESPOND	2.	UNKNOWN	193.0000	24.1250	57.4318	3298.4107	(8)
DISCREP	3.	INCORRECT ITEMS	6342.0000	55.1478	72.2554	5220.8464	(115)
RESPOND	0.	NEGATIVE	1338.0000	28.4681	31.7352	1007.1240	(47)
RESPOND	1.	POSITIVE	981.0000	40.8750	38.0315	1446.2011	(24)
RESPOND	2.	UNKNOWN	4023.0000	91.4318	98.7389	9749.3673	(44)
DISCREP	4.	ALL SHORTAGES	3060.0000	40.2632	39.8314	1586.5432	(76)
RESPOND	0.	NEGATIVE	621.0000	28.2273	30.2087	912.5649	(22)
RESPOND	1.	POSITIVE	1245.0000	51.8750	48.2568	2328.7228	(24)
RESPOND	2.	UNKNOWN	1194.0000	39.8000	37.0632	1373.6828	(30)
DISCREP	5.	DEFECTIVE ITEMS	698.0000	58.1667	60.7212	3687.0606	(12)
RESPOND	0.	NEGATIVE	20.0000	20.0000	0.	0.	(1)
RESPOND	1.	POSITIVE	80.0000	40.0000	22.6274	512.0000	(2)
RESPOND	2.	UNKNOWN	598.0000	66.4444	68.2937	4664.0278	(9)
DISCREP	6.	MISDIRECTED SHIPMENT	0.	0.	0.	0.	(1)
RESPOND	2.	UNKNOWN	0.	0.	0.	0.	(1)
DISCREP	7.	UNSPECIFIED DISCREPS	1642.0000	71.3913	69.3678	4811.8654	(23)
RESPOND	0.	NEGATIVE	152.0000	152.0000	0.	0.	(1)
RESPOND	1.	POSITIVE	557.0000	92.8333	79.4315	6309.3667	(6)
RESPOND	2.	UNKNOWN	933.0000	58.3125	64.4574	4154.7625	(16)

SHIPPER	3.	LPS-LCL PURCH SOURCE	20941.0000	46.7433	49.9962	2499.6230	(448)
DISCREP	1.	NO DOCUMENTATION	346.0000	31.4545	37.6892	1420.4727	(11)
RESPOND	0.	NEGATIVE	39.0000	39.0000	0.	0.	(1)
RESPOND	1.	POSITIVE	244.0000	30.5000	43.8439	1922.2857	(8)
RESPOND	2.	UNKNOWN	63.0000	31.5000	26.1630	684.5000	(2)
DISCREP	2.	ALL OVERAGES	6856.0000	43.9487	51.6681	2669.5974	(156)
RESPOND	0.	NEGATIVE	169.0000	14.0833	13.0067	169.1742	(12)
RESPOND	1.	POSITIVE	5246.0000	39.4436	43.5393	1895.6729	(133)
RESPOND	2.	UNKNOWN	1441.0000	131.0000	80.5841	6493.8000	(11)
DISCREP	3.	INCORRECT ITEMS	6447.0000	54.1765	51.9081	2694.4516	(119)
RESPOND	0.	NEGATIVE	56.0000	18.6667	6.6583	44.3333	(3)
RESPOND	1.	POSITIVE	5096.0000	47.6262	43.9933	1935.4061	(107)
RESPOND	2.	UNKNOWN	1295.0000	143.8889	63.1416	3986.8611	(9)
DISCREP	4.	ALL SHORTAGES	4399.0000	46.7979	47.8570	2290.2920	(94)
RESPOND	0.	NEGATIVE	237.0000	26.3333	44.5028	1980.5000	(9)
RESPOND	1.	POSITIVE	3594.0000	44.9250	42.8653	1837.4673	(80)
RESPOND	2.	UNKNOWN	568.0000	113.6000	80.0519	6408.3000	(5)
DISCREP	5.	DEFECTIVE ITEMS	1644.0000	60.8889	56.7981	3226.0256	(27)
RESPOND	1.	POSITIVE	1013.0000	44.0435	27.5392	758.4071	(23)
RESPOND	2.	UNKNOWN	597.0000	199.0000	36.8646	1359.0000	(3)
DISCREP	7.	UNSPECIFIED DISCREPS	1115.0000	31.8571	37.2670	1388.8319	(35)
RESPOND	0.	NEGATIVE	28.0000	7.0000	4.3205	18.6667	(4)
RESPOND	1.	POSITIVE	126.0000	14.0000	14.0178	196.5000	(9)
RESPOND	2.	UNKNOWN	961.0000	43.6818	42.0741	1770.2273	(22)
DISCREP	8.	TECHNICAL PROBLEMS	134.0000	22.3333	6.3456	40.2667	(6)
RESPOND	0.	NEGATIVE	134.0000	22.3333	6.3456	40.2667	(6)

AD-A089 327 AIR FORCE INST OF TECH WRIGHT-PATTERSON AFB OH SCHOOL--ETC F/G 15/5
AN ANALYSIS OF REPORTS OF ITEM SHIPMENT DISCREPANCIES SUBMITTED--ETC(U)
JUN 80 F E SMITH, M SAENGARAM
UNCLASSIFIED AFIT-LSSR-55-80 NL

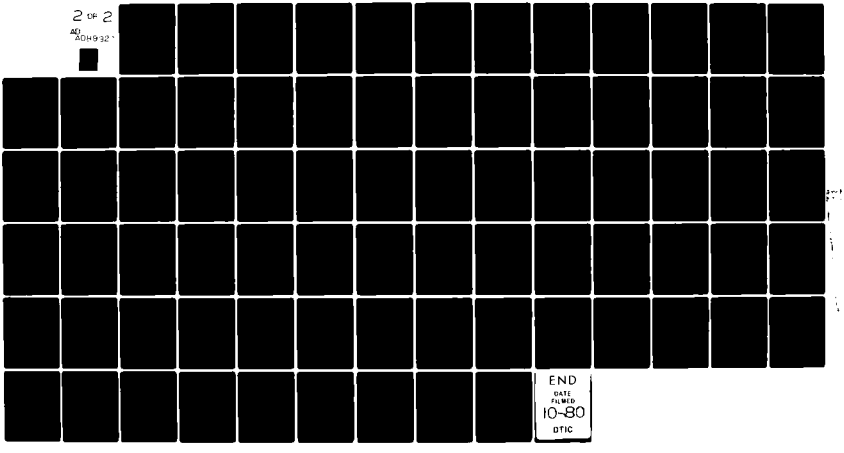

SHIPPER	4.	AFD-AIR FORCE DEPOT	5592.0000	48.6261	73.7175	5434.2712	(115)
DISCREP	1.	NO DOCUMENTATION	191.0000	27.2857	11.6578	135.9048	(7)
RESPOND	0.	NEGATIVE	164.0000	27.3333	12.7698	163.0667	(6)
RESPOND	2.	UNKNOWN	27.0000	27.0000	0.	0.	(1)
DISCREP	2.	ALL OVERAGES	75.0000	7.5000	15.6649	245.3889	(10)
RESPOND	0.	NEGATIVE	0.	0.	0.	0.	(2)
RESPOND	1.	POSITIVE	69.0000	34.5000	19.0919	364.5000	(2)
RESPOND	2.	UNKNOWN	6.0000	1.0000	2.0000	4.0000	(6)
DISCREP	3.	INCORRECT ITEMS	1659.0000	33.1000	58.3629	3406.2322	(50)
RESPOND	0.	NEGATIVE	148.0000	21.1429	19.2478	370.4762	(7)
RESPOND	1.	POSITIVE	631.0000	39.4375	25.3850	644.3958	(16)
RESPOND	2.	UNKNOWN	880.0000	32.5926	76.8031	5898.7123	(27)
DISCREP	4.	ALL SHORTAGES	2136.0000	118.6667	92.2197	8504.4706	(18)
RESPOND	0.	NEGATIVE	16.0000	16.0000	0.	0.	(1)
RESPOND	1.	POSITIVE	52.0000	26.0000	4.2426	18.0000	(2)
RESPOND	2.	UNKNOWN	2068.0000	137.8667	89.1683	7950.9810	(15)
DISCREP	5.	DEFECTIVE ITEMS	1372.0000	98.0000	97.4821	9502.7692	(14)
RESPOND	0.	NEGATIVE	21.0000	21.0000	0.	0.	(1)
RESPOND	1.	POSITIVE	41.0000	20.5000	10.6066	112.5000	(2)
RESPOND	2.	UNKNOWN	1310.0000	119.0909	100.2940	10058.8909	(11)
DISCREP	6.	MISDIRECTED SHIPMENT	0.	0.	0.	0.	(10)
RESPOND	0.	NEGATIVE	0.	0.	0.	0.	(3)
RESPOND	2.	UNKNOWN	0.	0.	0.	0.	(7)
DISCREP	7.	UNSPECIFIED DISCREPS	159.0000	26.5000	9.1815	84.3000	(6)
RESPOND	1.	POSITIVE	39.0000	39.0000	0.	0.	(1)
RESPOND	2.	UNKNOWN	120.0000	24.0000	7.6485	58.5000	(5)

TOTAL CASES = 1336

APPENDIX B

FREQUENCY DISTRIBUTION OF THE RESPONSE TIME FOR SELECTED SHIPPERS AND DISCREPANCIES

TABLE B-1

Frequency Distribution of the Overall
Response Time For All Shippers

LAGTIME DAY ROID SENT MINUS DAY RECEIVED BACK

CATEGORY LABEL	CODE	ABSOLUTE FREQ	RELATIVE FREQ (PCT)	ADJUSTED FREQ (PCT)	CUM FREQ (PCT)
0-10 DAYS	1.	467	35.0	35.0	35.0
11-20 DAYS	2.	217	16.2	16.2	51.2
21-30 DAYS	3.	147	11.0	11.0	62.2
31-40 DAYS	4.	122	9.1	9.1	71.3
41-50 DAYS	5.	63	4.7	4.7	76.0
51-60 DAYS	6.	43	3.2	3.2	79.3
61-70 DAYS	7.	41	3.1	3.1	82.3
71-80 DAYS	8.	26	1.9	1.9	84.3
81-90 DAYS	9.	19	1.4	1.4	85.7
91 DAYS OR MORE	10.	191	14.3	14.3	100.0
	TOTAL	1336	100.0	100.0	

TABLE B-2

Frequency Distribution of the Overall
Response Time for GSA Shippers

LAGTIME DAY ROID SENT MINUS DAY RECEIVED BACK

CATEGORY LABEL	CODE	ABSOLUTE FREQ	RELATIVE FREQ (PCT)	ADJUSTED FREQ (PCT)	CUM FREQ (PCT)
0-10 DAYS	1.	285	66.9	66.9	66.9
11-20 DAYS	2.	29	6.8	6.8	73.7
21-30 DAYS	3.	11	2.6	2.6	76.3
31-40 DAYS	4.	20	4.7	4.7	81.0
41-50 DAYS	5.	8	1.9	1.9	82.9
51-60 DAYS	6.	6	1.4	1.4	84.3
61-70 DAYS	7.	7	1.6	1.6	85.9
71-80 DAYS	8.	2	0.5	0.5	86.4
81-90 DAYS	9.	4	0.9	0.9	87.3
91 DAYS OR MORE	10.	54	12.7	12.7	100.0
	TOTAL	426	100.0	100.0	

TABLE B-3

Frequency Distribution of the Overall
Response Time for All DLA Shippers

LAGTIME DAY ROID SENT MINUS DAY RECEIVED BACK

CATEGORY LABEL	CODE	ABSOLUTE FREQ	RELATIVE FREQ (PCT)	ADJUSTED FREQ (PCT)	CUM FREQ (PCT)
0-10 DAYS	1.	53	15.3	15.3	15.3
11-20 DAYS	2.	79	22.8	22.8	38.0
21-30 DAYS	3.	59	17.0	17.0	55.0
31-40 DAYS	4.	45	13.0	13.0	68.0
41-50 DAYS	5.	23	6.6	6.6	74.6
51-60 DAYS	6.	12	3.5	3.5	78.1
61-70 DAYS	7.	12	3.5	3.5	81.6
71-80 DAYS	8.	12	3.5	3.5	85.0
81-90 DAYS	9.	4	1.2	1.2	86.2
91 DAYS OR MORE	10.	48	13.8	13.8	100.0
	TOTAL	347	100.0	100.0	

TABLE B-4

Frequency Distribution of the Overall
Response Time for LPS Shippers

LAGTIME DAY ROID SENT MINUS DAY RECEIVED BACK

CATEGORY LABEL	CODE	ABSOLUTE FREQ	RELATIVE FREQ (PCT)	ADJUSTED FREQ (PCT)	CUM FREQ (PCT)
0-10 DAYS	1.	83	18.5	18.5	18.5
11-20 DAYS	2.	96	21.4	21.4	40.0
21-30 DAYS	3.	62	13.8	13.8	53.8
31-40 DAYS	4.	50	11.2	11.2	65.0
41-50 DAYS	5.	24	5.4	5.4	70.3
51-60 DAYS	6.	23	5.1	5.1	75.4
61-70 DAYS	7.	21	4.7	4.7	80.1
71-80 DAYS	8.	10	2.2	2.2	82.4
81-90 DAYS	9.	8	1.8	1.8	84.2
91 DAYS OR MORE	10.	71	15.8	15.8	100.0
	TOTAL	448	100.0	100.0	

TABLE B-5

Frequency Distribution of the Overall
Response Rate for AFD Shippers

LAGTIME DAY ROID SENT MINUS DAY RECEIVED BACK

CATEGORY LABEL	CODE	ABSOLUTE FREQ	RELATIVE FREQ (PCT)	ADJUSTED FREQ (PCT)	CUM FREQ (PCT)
0-10 DAYS	1.	46	40.0	40.0	40.0
11-20 DAYS	2.	13	11.3	11.3	51.3
21-30 DAYS	3.	15	13.0	13.0	64.3
31-40 DAYS	4.	7	6.1	6.1	70.4
41-50 DAYS	5.	8	7.0	7.0	77.4
51-60 DAYS	6.	2	1.7	1.7	79.1
61-70 DAYS	7.	1	0.9	0.9	80.0
71-80 DAYS	8.	2	1.7	1.7	81.7
81-90 DAYS	9.	3	2.6	2.6	84.3
91 DAYS OR MORE	10.	18	15.7	15.7	100.0
	TOTAL	115	100.0	100.0	

TABLE B-6

Frequency Distribution of the Response Time for Type of Discrepancy

NO DOCUMENTATION

LAGTIME DAY ROID SENT MINUS DAY RECEIVED BACK

CATEGORY LABEL	CODE	ABSOLUTE FREQ	RELATIVE FREQ (PCT)	ADJUSTED FREQ (PCT)	CUM FREQ (PCT)
0-10 DAYS	1.	274	67.8	67.8	67.8
11-20 DAYS	2.	46	11.4	11.4	79.2
21-30 DAYS	3.	25	6.2	6.2	85.4
31-40 DAYS	4.	26	6.4	6.4	91.8
41-50 DAYS	5.	9	2.2	2.2	94.1
51-60 DAYS	6.	4	1.0	1.0	95.0
61-70 DAYS	7.	5	1.2	1.2	96.3
71-80 DAYS	8.	4	1.0	1.0	97.3
81-90 DAYS	9.	2	0.5	0.5	97.8
91 DAYS OR MORE	10.	9	2.2	2.2	100.0
	TOTAL	404	100.0	100.0	

TABLE B-7

Frequency Distribution of the Response Time for Type of Discrepancy

OVERAGE

LAGTIME DAY ROID SENT MINUS DAY RECEIVED BACK

CATEGORY LABEL	CODE	ABSOLUTE FREQ	RELATIVE FREQ (PCT)	ADJUSTED FREQ (PCT)	CUM FREQ (PCT)
0-10 DAYS	1.	56	26.0	26.0	26.0
11-20 DAYS	2.	43	20.0	20.0	46.0
21-30 DAYS	3.	32	14.9	14.9	60.9
31-40 DAYS	4.	16	7.4	7.4	68.4
41-50 DAYS	5.	7	3.3	3.3	71.6
51-60 DAYS	6.	7	3.3	3.3	74.9
61-70 DAYS	7.	9	4.2	4.2	79.1
71-80 DAYS	8.	6	2.8	2.8	81.9
81-90 DAYS	9.	1	0.5	0.5	82.3
91 DAYS OR MORE	10.	38	17.7	17.7	100.0
	TOTAL	215	100.0	100.0	

TABLE B-8

Frequency Distribution of the Response Time for Type of Discrepancy

INCORRECT ITEM

LAGTIME DAY ROID SENT MINUS DAY RECEIVED BACK

CATEGORY LABEL	CODE	ABSOLUTE FREQ	RELATIVE FREQ (PCT)	ADJUSTED FREQ (PCT)	CUM FREQ (PCT)
0-10 DAYS	1.	70	22.4	22.4	22.4
11-20 DAYS	2.	62	19.8	19.8	42.2
21-30 DAYS	3.	37	11.8	11.8	54.0
31-40 DAYS	4.	30	9.6	9.6	63.6
41-50 DAYS	5.	20	6.4	6.4	70.0
51-60 DAYS	6.	11	3.5	3.5	73.5
61-70 DAYS	7.	12	3.8	3.8	77.3
71-80 DAYS	8.	4	1.3	1.3	78.6
81-90 DAYS	9.	7	2.2	2.2	80.8
91 DAYS OR MORE	10.	60	19.2	19.2	100.0
	TOTAL	313	100.0	100.0	

TABLE B-9

Frequency Distribution for the Response Time for Type of Discrepancy

SHORTAGE

LAGTIME DAY ROID SENT MINUS DAY RECEIVED BACK

CATEGORY LABEL	CODE	ABSOLUTE FREQ	RELATIVE FREQ (PCT)	ADJUSTED FREQ (PCT)	CUM FREQ (PCT)
0-10 DAYS	1.	31	12.8	12.8	12.8
11-20 DAYS	2.	47	19.3	19.3	32.1
21-30 DAYS	3.	33	13.6	13.6	45.7
31-40 DAYS	4.	33	13.6	13.6	59.3
41-50 DAYS	5.	17	7.0	7.0	66.3
51-60 DAYS	6.	9	3.7	3.7	70.0
61-70 DAYS	7.	9	3.7	3.7	73.7
71-80 DAYS	8.	4	1.6	1.6	75.3
81-90 DAYS	9.	3	1.2	1.2	76.5
91 DAYS OR MORE	10.	57	23.5	23.5	100.0
	TOTAL	243	100.0	100.0	

TABLE B-10

Frequency Distribution of the Response Time for Type of Discrepancy

DEFECTIVE

LAGTIME DAY ROID SENT MINUS DAY RECEIVED BACK

CATEGORY LABEL	CODE	ABSOLUTE FREQ	RELATIVE FREQ (PCT)	ADJUSTED FREQ (PCT)	CUM FREQ (PCT)
0-10 DAYS	1.	11	17.2	17.2	17.2
11-20 DAYS	2.	5	7.8	7.8	25.0
21-30 DAYS	3.	6	9.4	9.4	34.4
31-40 DAYS	4.	7	10.9	10.9	45.3
41-50 DAYS	5.	3	4.7	4.7	50.0
51-60 DAYS	6.	2	3.1	3.1	53.1
61-70 DAYS	7.	4	6.3	6.3	59.4
71-80 DAYS	8.	5	7.8	7.8	67.2
81-90 DAYS	9.	4	6.3	6.3	73.4
91 DAYS OR MORE	10.	17	26.6	26.6	100.0
	TOTAL	64	100.0	100.0	

TABLE B-11

Frequency Distribution of the Response Time for Type of Discrepancy

UNSPECIFIED REASON

LAGTIME DAY ROID SENT MINUS DAY RECEIVED BACK

CATEGORY LABEL	CODE	ABSOLUTE FREQ	RELATIVE FREQ (PCT)	ADJUSTED FREQ (PCT)	CUM FREQ (PCT)
0-10 DAYS	1.	14	17.5	17.5	17.5
11-20 DAYS	2.	11	13.8	13.8	31.3
21-30 DAYS	3.	12	15.0	15.0	46.3
31-40 DAYS	4.	9	11.3	11.3	57.5
41-50 DAYS	5.	7	8.8	8.8	66.3
51-60 DAYS	6.	10	12.5	12.5	78.8
61-70 DAYS	7.	2	2.5	2.5	81.3
71-80 DAYS	8.	3	3.8	3.8	85.0
81-90 DAYS	9.	2	2.5	2.5	87.5
91 DAYS OR MORE	10.	10	12.5	12.5	100.0
	TOTAL	80	100.0	100.0	

TABLE B-12

Frequency Distribution of the Response
Time for Type of Discrepancy

MISDIRECTED SHIPMENT

LAGTIME DAY ROID SENT MINUS DAY RECEIVED BACK

CATEGORY LABEL	CODE	ABSOLUTE FREQ	RELATIVE FREQ (PCT)	ADJUSTED FREQ (PCT)	CUM FREQ (PCT)
0-10 DAYS	1.	11	100.0	100.0	100.0
	TOTAL	11	100.0	100.0	

TABLE B-13

Frequency Distribution of the Response
Time for Type of Discrepancy

TECHNICAL PROBLEMS

LAGTIME DAY ROID SENT MINUS DAY RECEIVED BACK

CATEGORY LABEL	CODE	ABSOLUTE FREQ	RELATIVE FREQ (PCT)	ADJUSTED FREQ (PCT)	CUM FREQ (PCT)
11-20 DAYS	2.	3	50.0	50.0	50.0
21-30 DAYS	3.	2	33.3	33.3	83.3
31-40 DAYS	4.	1	16.7	16.7	100.0
	TOTAL	6	100.0	100.0	

APPENDIX C

SELECTED STATISTICS OF THE OVERALL RESPONSE TIME BY SHIPPER, DISCREPANCY, AND RESPONSE

TABLE C-1

Selected Statistics of the Overall Response Time by Type of Discrepancy

DESCRIPTION OF SUBPOPULATIONS

CRITERION VARIABLE LAGTIME DAY ROID SENT MINUS DAY RECEIVED BACK
BROKEN DOWN BY DISCREP TYPE OF SHIPMENT DISCREPANCY

VARIABLE	CODE	VALUE LABEL	SUM	MEAN	STD DEV	VARIANCE	N
FOR ENTIRE POPULATION			56729.0000	42.4618	55.4259	3072.0300	(1336)
DISCREP	1.	NO DOCUMENTATION	6803.0000	16.8391	23.1347	535.2123	(404)
DISCREP	2.	ALL OVERAGES	10057.0000	46.7767	57.2193	3274.0434	(215)
DISCREP	3.	INCORRECT ITEMS	16392.0000	52.3866	63.2065	3995.0648	(313)
DISCREP	4.	ALL SHORTAGES	14607.0000	60.4463	62.5762	3915.0328	(243)
DISCREP	5.	DEFECTIVE ITEMS	4737.0000	74.0156	70.4314	4960.5871	(64)
DISCREP	6.	MISDIRECTED SHIPMENT	0.	0.	0.	0.	(11)
DISCREP	7.	UNSPECIFIED DISCREPS	3914.0000	48.9250	51.5908	2661.6146	(80)
DISCREP	8.	TECHNICAL PROBLEMS	134.0000	22.3333	6.3456	40.2667	(6)

TOTAL CASES = 1336

TABLE C-2

Selected Statistics of the Overall Response Time By Shipper

DESCRIPTION OF SUBPOPULATIONS

CRITERION VARIABLE LAGTIME — DAY ROID SENT MINUS DAY RECEIVED BACK
BROKEN DOWN BY SHIPPER — ACTIVITY TO WHICH ROID WAS SENT

VARIABLE	CODE	VALUE LABEL	SUM	MEAN	STD DEV	VARIANCE	N
FOR ENTIRE POPULATION			56729.0000	42.4618	55.4259	3072.0300	(1336)
SHIPPER	1.	GSA-GEN SER ADMIN	13088.0000	32.3009	54.2416	2942.1557	(426)
SHIPPER	2.	DLA DEF LOG AGENCY	16300.0000	46.9971	55.1804	3042.6676	(347)
SHIPPER	3.	[illegible]	20941.0000	46.7433	49.9962	2499.6240	(448)
SHIPPER	4.	AFD-AIR FORCE DEPOT	5592.0000	48.6261	73.7175	5434.2712	(115)

TOTAL CASES = 1336

TABLE C-3

Selected Statistics of the Overall

Response Time by Response

DESCRIPTION OF SUBPOPULATIONS

CRITERION VARIABLE LAGTIME DAY RUID SENT MINUS DAY RECEIVED BACK
BROKEN DOWN BY RESPOND ANSWER FROM THE SHIPPER TO THE BASE

VARIABLE	CODE	VALUE LABEL	SUM	MEAN	STD DEV	VARIANCE	N
FOR ENTIRE POPULATION			56729.0000	42.4618	55.4259	3072.0300	(1336)
RESPOND	0.	NEGATIVE	6068.0000	16.7734	26.5698	705.9548	(481)
RESPOND	1.	POSITIVE	24179.0000	44.2839	41.1106	1690.0789	(546)
RESPOND	2.	UNKNOWN	24482.0000	79.2298	82.6559	6831.9957	(309)

TOTAL CASES = 1336

APPENDIX D

FREQUENCY DISTRIBUTION OF THE TYPE OF DISCREPANCY FOR SELECTED SHIPPERS

TABLE D-1

Frequency Distribution of All
Discrepancies for All Shippers

DISCREP TYPE OF SHIPMENT DISCREPANCY

CATEGORY LABEL	CODE	ABSOLUTE FREQ	RELATIVE FREQ (PCT)	ADJUSTED FREQ (PCT)	CUM FREQ (PCT)
NO DOCUMENTATION	1.	404	30.2	30.2	30.2
ALL OVERAGES	2.	215	16.1	16.1	46.3
INCORRECT ITEMS	3.	313	23.4	23.4	69.8
ALL SHORTAGES	4.	243	18.2	18.2	87.9
DEFECTIVE ITEMS	5.	64	4.8	4.8	92.7
MISDIRECTED SHIPMENT	6.	11	0.8	0.8	93.6
UNSPECIFIED DISCREPS	7.	80	6.0	6.0	99.6
TECHNICAL PROBLEMS	8.	6	0.4	0.4	100.0
	TOTAL	1336	100.0	100.0	

TABLE D-2

Frequency Distribution of All
Discrepancies for GSA Shippers

DISCREP TYPE OF SHIPMENT DISCREPANCY

CATEGORY LABEL	CODE	ABSOLUTE FREQ	RELATIVE FREQ (PCT)	ADJUSTED FREQ (PCT)	CUM FREQ (PCT)
NO DOCUMENTATION	1.	291	68.3	68.3	68.3
ALL OVERAGES	2.	24	5.6	5.6	73.9
INCORRECT ITEMS	3.	29	6.8	6.8	80.8
ALL SHORTAGES	4.	55	12.9	12.9	93.7
DEFECTIVE ITEMS	5.	11	2.6	2.6	96.2
UNSPECIFIED DISCREPS	7.	16	3.8	3.8	100.0
	TOTAL	426	100.0	100.0	

TABLE D-3

Frequency Distribution of All
Discrepancies for DLA Shippers

DISCREP TYPE OF SHIPMENT DISCREPANCY

CATEGORY LABEL	CODE	ABSOLUTE FREQ	RELATIVE FREQ (PCT)	ADJUSTED FREQ (PCT)	CUM FREQ (PCT)
NO DOCUMENTATION	1.	95	27.4	27.4	27.4
ALL OVERAGES	2.	25	7.2	7.2	34.6
INCORRECT ITEMS	3.	115	33.1	33.1	67.7
ALL SHORTAGES	4.	76	21.9	21.9	89.6
DEFECTIVE ITEMS	5.	12	3.5	3.5	93.1
MISDIRECTED SHIPMENT	6.	1	0.3	0.3	93.4
UNSPECIFIED DISCREPS	7.	23	6.6	6.6	100.0
	TOTAL	347	100.0	100.0	

TABLE D-4

Frequency Distribution of All
Discrepancies for LPS Shippers

DISCREP TYPE OF SHIPMENT DISCREPANCY

CATEGORY LABEL	CODE	ABSOLUTE FREQ	RELATIVE FREQ (PCT)	ADJUSTED FREQ (PCT)	CUM FREQ (PCT)
NO DOCUMENTATION	1.	11	2.5	2.5	2.5
ALL OVERAGES	2.	156	34.8	34.8	37.3
INCORRECT ITEMS	3.	119	26.6	26.6	63.8
ALL SHORTAGES	4.	94	21.0	21.0	84.8
DEFECTIVE ITEMS	5.	27	6.0	6.0	90.8
UNSPECIFIED DISCREPS	7.	35	7.8	7.8	98.7
TECHNICAL PROBLEMS	8.	6	1.3	1.3	100.0
	TOTAL	448	100.0	100.0	

TABLE D-5

Frequency Distribution of All
Discrepancies for AFD Shippers

DISCREP TYPE OF SHIPMENT DISCREPANCY

CATEGORY LABEL	CODE	ABSOLUTE FREQ	RELATIVE FREQ (PCT)	ADJUSTED FREQ (PCT)	CUM FREQ (PCT)
NO DOCUMENTATION	1.	7	6.1	6.1	6.1
ALL OVERAGES	2.	10	8.7	8.7	14.8
INCORRECT ITEMS	3.	50	43.5	43.5	58.3
ALL SHORTAGES	4.	18	15.7	15.7	73.9
DEFECTIVE ITEMS	5.	14	12.2	12.2	86.1
MISDIRECTED SHIPMENT	6.	10	8.7	8.7	94.8
UNSPECIFIED DISCREPS	7.	6	5.2	5.2	100.0
	TOTAL	115	100.0	100.0	

TABLE D-6

Overall Frequency Distribution for All Shippers for Type of Discrepancy
NO DOCUMENTATION

SHIPPER ACTIVITY TO WHICH ROID WAS SENT

CATEGORY LABEL	CODE	ABSOLUTE FREQ	RELATIVE FREQ (PCT)	ADJUSTED FREQ (PCT)	CUM FREQ (PCT)
GEN SERVICES ADMIN	1.	291	72.0	72.0	72.0
DEF LOG AGENCIES	2.	95	23.5	23.5	95.5
LOCAL PURCH SOURCE	3.	11	2.7	2.7	98.3
AIR FORCE SHIPPERS	4.	7	1.7	1.7	100.0
	TOTAL	404	100.0	100.0	

TABLE D-7

Overall Frequency Distribution for All Shippers for Type of Discrepancy
OVERAGE

SHIPPER ACTIVITY TO WHICH ROID WAS SENT

CATEGORY LABEL	CODE	ABSOLUTE FREQ	RELATIVE FREQ (PCT)	ADJUSTED FREQ (PCT)	CUM FREQ (PCT)
GEN SERVICES ADMIN	1.	24	11.2	11.2	11.2
DEF LOG AGENCIES	2.	25	11.6	11.6	22.8
LOCAL PURCH SOURCE	3.	156	72.6	72.6	95.3
AIR FORCE SHIPPERS	4.	10	4.7	4.7	100.0
	TOTAL	215	100.0	100.0	

TABLE D-8

Overall Frequency Distribution for All Shippers for Type of Discrepancy
INCORRECT ITEM

SHIPPER ACTIVITY TO WHICH ROID WAS SENT

CATEGORY LABEL	CODE	ABSOLUTE FREQ	RELATIVE FREQ (PCT)	ADJUSTED FREQ (PCT)	CUM FREQ (PCT)
GEN SERVICES ADMIN	1.	29	9.3	9.3	9.3
DEF LOG AGENCIES	2.	115	36.7	36.7	46.0
LOCAL PURCH SOURCE	3.	119	38.0	38.0	84.0
AIR FORCE SHIPPERS	4.	50	16.0	16.0	100.0
	TOTAL	313	100.0	100.0	

TABLE D-9

Overall Frequency Distribution for All Shippers for Type of Discrepancy
SHORTAGE

SHIPPER ACTIVITY TO WHICH ROID WAS SENT

CATEGORY LABEL	CODE	ABSOLUTE FREQ	RELATIVE FREQ (PCT)	ADJUSTED FREQ (PCT)	CUM FREQ (PCT)
GEN SERVICES ADMIN	1.	55	22.6	22.6	22.6
DEF LOG AGENCIES	2.	76	31.3	31.3	53.9
LOCAL PURCH SOURCE	3.	94	38.7	38.7	92.6
AIR FORCE SHIPPERS	4.	18	7.4	7.4	100.0
	TOTAL	243	100.0	100.0	

TABLE D-10

Overall Frequency Distribution for All
Shippers for Type of Discrepancy
DEFECTIVE

SHIPPER ACTIVITY TO WHICH ROID WAS SENT

CATEGORY LABEL	CODE	ABSOLUTE FREQ	RELATIVE FREQ (PCT)	ADJUSTED FREQ (PCT)	CUM FREQ (PCT)
GEN SERVICES ADMIN	1.	11	17.2	17.2	17.2
DEF LOG AGENCIES	2.	12	18.8	18.8	35.9
LOCAL PURCH SOURCE	3.	27	42.2	42.2	78.1
AIR FORCE SHIPPERS	4.	14	21.9	21.9	100.0
	TOTAL	64	100.0	100.0	

TABLE D-11

Overall Frequency Distribution for All
Shippers for Type of Discrepancy
MISDIRECTED SHIPMENTS

SHIPPER ACTIVITY TO WHICH ROID WAS SENT

CATEGORY LABEL	CODE	ABSOLUTE FREQ	RELATIVE FREQ (PCT)	ADJUSTED FREQ (PCT)	CUM FREQ (PCT)
DEF LOG AGENCIES	2.	1	9.1	9.1	9.1
AIR FORCE SHIPPERS	4.	10	90.9	90.9	100.0
	TOTAL	11	100.0	100.0	

TABLE D-12

Overall Frequency Distribution for All
Shippers for Type of Discrepancy
UNSPECIFIED REASON

SHIPPER ACTIVITY TO WHICH ROID WAS SENT

CATEGORY LABEL	CODE	ABSOLUTE FREQ	RELATIVE FREQ (PCT)	ADJUSTED FREQ (PCT)	CUM FREQ (PCT)
GEN SERVICES ADMIN	1.	16	20.0	20.0	20.0
DEF LOG AGENCIES	2.	23	28.8	28.8	48.8
LOCAL PURCH SOURCE	3.	35	43.8	43.8	92.5
AIR FORCE SHIPPERS	4.	6	7.5	7.5	100.0
	TOTAL	80	100.0	100.0	

TABLE D-13

Overall Frequency Distribution for All
Shippers for Type of Discrepancy
TECHNICAL PROBLEM

SHIPPER ACTIVITY TO WHICH ROID WAS SENT

CATEGORY LABEL	CODE	ABSOLUTE FREQ	RELATIVE FREQ (PCT)	ADJUSTED FREQ (PCT)	CUM FREQ (PCT)
LOCAL PURCH SOURCE	3.	6	100.0	100.0	100.0
	TOTAL	6	100.0	100.0	

APPENDIX E

STANDARD FORM 364 REPORT OF ITEM DISCREPANCY - OLD AND NEW FORMATS

REPORT OF ITEM DISCREPANCY (ROID)

1. DATE OF PREPARATION: 74 Nov 09
2. REPORT NUMBER: FBXXXX42120001

3. TO (Name and address include ZIP Code):
(S9I) DISC
700 Robbins Ave
Phila. PA 19111

4. FROM (Name and address include ZIP Code):
(FBXXXX) 1452 Combat Support Group
Eastover AFB, Texas 76014

5a. SHIPPER's NAME: APEX Special Metals Co.
Oklahoma City, OK 73156

5b. DATE OF INVOICE: 74 Oct 25

5c. INVOICE NUMBER: APEX Co. 43/67x

6. SHIPMENT NUMBER: 0003

7. GBL, MANIFEST, WAYBILL, TCN, ETC: ACME - 74/ABX

8. CONTRACT/DOCUMENT NUMBER: FDXXXX-XXXXX-XX
FBXXXX 42120001

9. NSN/PART NUMBER AND NOMENCLATURE	10. UNIT OF ISSUE	11. QUANTITY SHIPPED/ BILLED	12. QUANTITY RECEIVED	13. DISCREPANCY QUANTITY (a)	UNIT PRICE (b)	TOTAL COST (c)	CODE (d)	14. ACTION CODE
a. Ordered - (9515001234567) APEX P/N 2B6 METAL PLATE	EA	0	0	10	100.00	1000.00		
b. Received - APEX P/N 286 METAL PLATE	EA	10	10	10	125.00	1250.00	WI	1A 1Z

15. REMARKS (Continue on separate sheet of paper, if necessary)

A. APEX invoice indicate P/N 286 (copy of invoice attached)

B. If add info required - contact Sgt. Nevill
AUTOVON 277-4621

SUSPENSE 30 DAYS

[1]DISCREPANCY CODES

CONDITION OF MATERIAL
C1 - In condition other than that indicated on related/receipt document
C2 - Expired shelf life
C3 - Damaged during/lost shipment
SUPPLY CONDITION STATION
D1 - Not received
D2 - Illegible or mutilated
D3 - Improperly shipped/or without authority (Does not apply to overshipments received)
MISINSPECTED MATERIAL
M1 - Addressed to activity arriving
OVERAGE, DUPLICATE SHIPMENTS
O1 - Quantity in excess of that indicated on receipt document
O2 - Quantity in excess of that requested (either issue and/or requisition)
O3 - Quantity due invoice shipment
QUALITY DEFICIENCIES
Q1 - Deficient material (Applicable to Navy, Air and FMS shipments only)

SHORTAGE OF MATERIAL
S1 - Quantity less than indicated on document
S2 - Quantity less than that accepted (other than out of issue)
S3 - Non-receipt of part of total shipment
ITEM IDENTIFICATION DATA MISSING (See Notes, Key Blocks, Corrections, Special Instructions, etc.)
Y1 - Missing
Y2 - Illegible or mutilated
Y3 - Preservation, operational markings missing
Y4 - Inspection data missing or incomplete
Y5 - Unacceptably coded or data missing or incomplete
Y6 - Warranty data missing
WRONG ITEM (Identify requested item as a separate entry in Item 9 above)
W1 - Incorrect item received
W2 - Wrong NSN/CAGE/Part Number
OTHER DISCREPANCIES
Z1 - See remarks

[2]ACTION CODES

1A - Disposition instructions requested
1B - Material being returned
1C - Suspension of supply documentation requested
1D - Materiel disposition required regarding shipment
1E - Local purchase made or will be accomplished
1F - Replacement shipment requested
1Z - No action required (explanation required)

16a. TYPED OR PRINTED NAME AND TITLE OF PREPARING OFFICIAL: Don Nevill - SMSGT
NCOIC - Receiving

16b. SIGNATURE: Don Nevill

17. FUNDING AND ACCOUNTING DATA

18. VOUCHER NUMBER	18a. SIGNATURE OF APPROVING OFFICIAL	18b. DATE

20. DISTRIBUTION OF COPIES
2 copies DCASR - Ft. Worth
1 copy - ACC1 FIN OFF (FBXXXX)

364-102

STANDARD FORM 364 (Rev. 1-75)
Prescribed by GSA
FPMR 1-1-M 367

* 21. FROM

(S9I) DISC
700 Robbins Ave
Phila. PA 19111

22. TO

(FBXXXX) 1452 Combat Support Group
Eascover AFB, Texas 76014

Use window envelope to mail this document. Insert name and address, including ZIP Code, starting one typing space below the left dot. Each address line must NOT extend beyond right dot. Address must not exceed four single space typing lines.

23. IN ACCORDANCE WITH NOTICE OF DISCREPANCY ON REVERSE

a. ☐ INVOICE/BILL ATTACHED b. MATERIAL ☐ HAS BEEN ☐ WILL BE SHIPPED (Document No. _____)

c. A ☐ CREDIT ☐ DEBIT ADJUSTMENT IN THE BILLING HAS BEEN PROCESSED

24. THE FOLLOWING DISPOSITION IS TO BE MADE OF THE REFERENCED MATERIAL

a. ☐ SCRAP b. ☐ REPRESENTATIVE WILL CALL IN _____ DAYS FOR DISCUSSION CONCERNING DISPOSITION

c. ☐ WILL BE PICKED UP IN _____ DAYS

d. ☒ SHIP MATERIAL TO → APEX Special Metals Co.
Oklahoma City, OK 73156

(1) ☐ GBL APPROPRIATION CHARGEABLE

(2) ☒ CHARGES COLLECT - VIA ☒ FREIGHT ☐ EXPRESS ☐ PARCEL POST $ _____ (Intrinsic, Reduced Strength, Scrap, Excess, Surplus, Material Cannot Be Returned, Tables, Post Cancel)

e. ☐ OTHER (Specify)

25. REPLACEMENT WITH SATISFACTORY MATERIAL WILL BE MADE ON OR BEFORE (Date) _____

26. REMARKS

Indicate on shipping doc. "Shipment Authorized per APEX-Return Control No. 74/6274".

SAMPLE

27a. TYPED OR PRINTED NAME OF PREPARING OFFICIAL | 27b. SIGNATURE | 27c. DATE

Paula Freidman

U.S. GPO 1975 OL - 580 483 - 220 11 STANDARD FORM 364 BACK (Rev. 10-75)

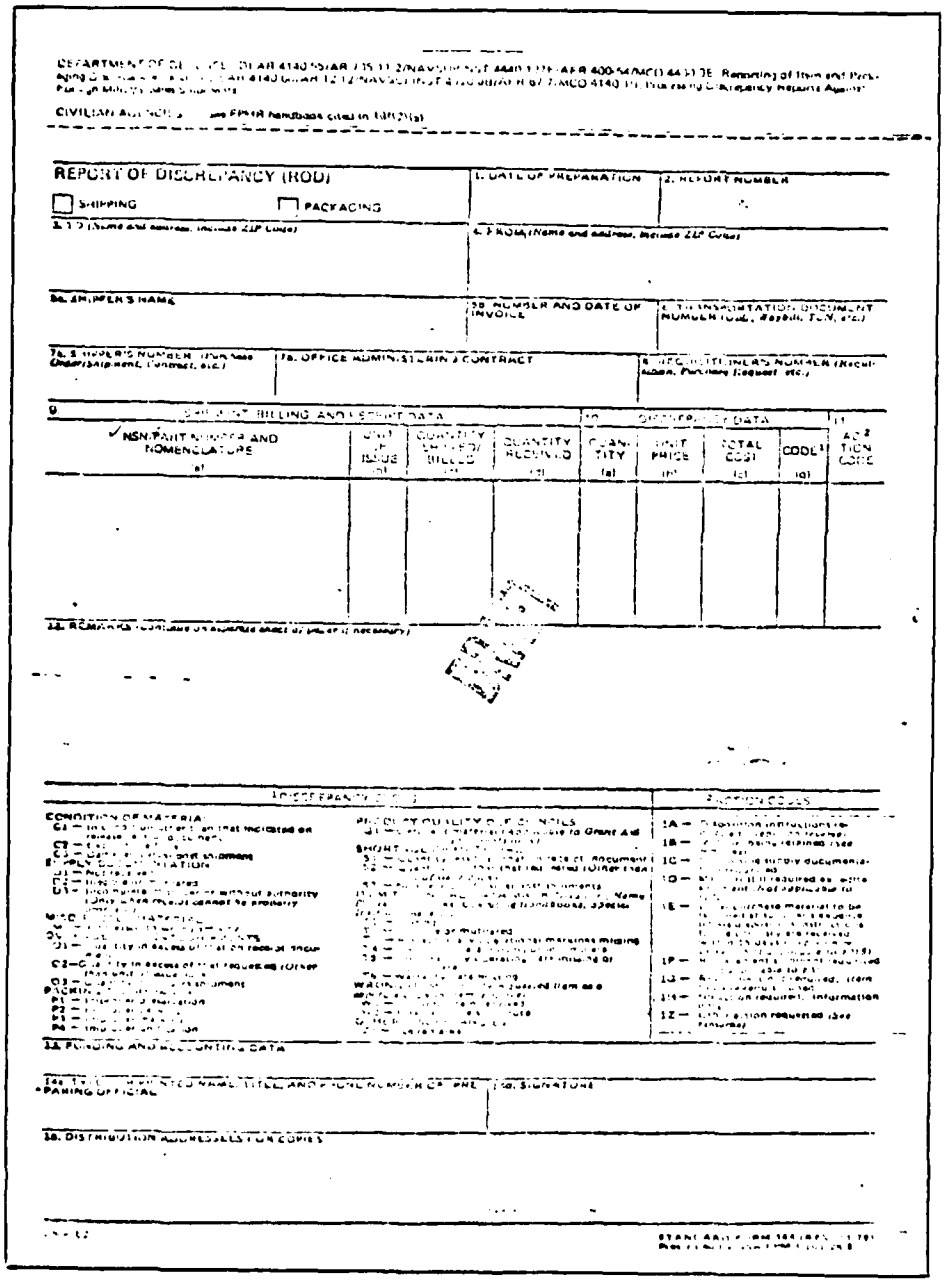

DEPARTMENT OF DEFENSE (DLAR 4140.55/AR 735-11-2/NAVSUPINST 4440.126/AFR 400-54/MCO 4430.3E. Reporting of Item and Packaging Discrepancies (Air Force, Army, Navy, Marine Corps, DLA, GSA, and Foreign Military Sales Shipments)

CIVILIAN AGENCIES: See FPMR handbook cited in 101-26.11(a)

REPORT OF DISCREPANCY (ROD)

☐ SHIPPING ☐ PACKAGING

1. DATE OF PREPARATION

2. REPORT NUMBER

3. TO (Name and address, include ZIP Code)

4. FROM (Name and address, include ZIP Code)

5a. SHIPPER'S NAME

5b. NUMBER AND DATE OF INVOICE

5c. TRANSPORTATION DOCUMENT NUMBER (GBL, Airbill, T.C.N., etc.)

6a. SUPPLIER'S NUMBER (Purchase Order/Shipment, Contract, etc.)

6b. OFFICE ADMINISTERING CONTRACT

6c. RECEIVING LINE/LOT NUMBER (Reconciliation, Purchase Request etc.)

9 SHIPMENT BILLING AND REPORT DATA				10 SHIPPED FROM DATA				11
✓NSN/PART NUMBER AND NOMENCLATURE (a)	UNIT OF ISSUE (b)	QUANTITY SHIPPED/BILLED (c)	QUANTITY RECEIVED (d)	QUANTITY (e)	UNIT PRICE (f)	TOTAL COST (g)	CODE (h)	ACTION CODE

12. REMARKS (Continue on reverse side if necessary)

DISCREPANCY CODES

CONDITION OF MATERIAL
C1 — Item damaged or partial shipment indicated on receipt document
C2 — Excess
C3 — Item received with incorrect shipping documentation
C4 — Item received without authority
C5 — Item received in excess of contract or delivery order authority
C6 — Item received in excess of that requested (Other than overshipment)
C7 — Overshipment
C8 — Item received in excess of that requested (Overshipment)
C9 — Item received without packing slip
PACKING
P1 — Improper preservation
P2 — Improper packing
P3 — Improper marking
P4 — Improper identification

PROJECT/QUALITY DEFICIENCIES
Q1 — Item received not conforming to Grant Aid
SHORT
S1 — Quantity received less than quantity of document
S2 — Item received missing (Other than S1)
OVER
O1 — Item received in excess of documents
O2 — Item received in excess of Name and Address of Warehouse, Depot, etc.
WRONG
W1 — Item received
W2 — Item received
W3 — Item received
W4 — Item received
W5 — Item received
W6 — Item received
W7 — Item received
W8 — Item received
W9 — Item received
MISC
M1 — Item received missing
M2 — Item received
M3 — Item received
M4 — Item received
M5 — Item received
M6 — Item received
M7 — Item received
M8 — Item received
M9 — Item received

ACTION CODES
1A — Disposition instructions requested
1B — Item being returned (see 12)
1C — Corrected supply documentation requested
1D — Item returned as extra (not applicable to Grant Aid)
1E — Replacement material to be shipped (not applicable to Grant Aid)
1F — Replacement material not required
1J — Action taken, (Item 12)
1K — Information required, (Item 12)
1Z — Other action required (see remarks)

13A. FUNDING AND ACCOUNTING DATA

14a. TYPED NAME, TITLE AND PHONE NUMBER OF PREPARING OFFICIAL

14b. SIGNATURE

15. DISTRIBUTION ADDRESSES (FURNISH COPIES)

STANDARD FORM 364 (REV.) (DLA)

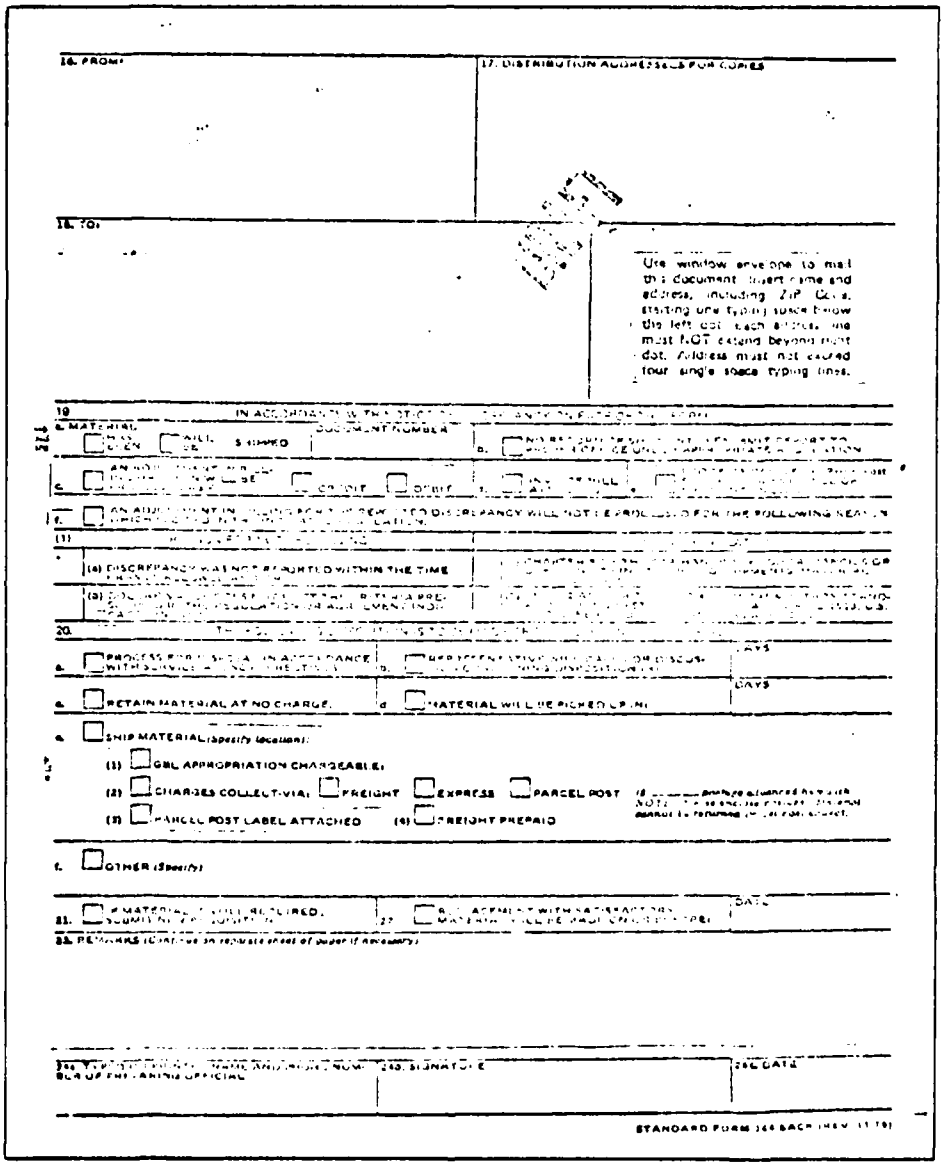

16. FROM:

17. DISTRIBUTION ADDRESSEES FOR COPIES

18. TO:

Use window envelope to mail this document. Insert name and address, including ZIP Code, starting one typing space below the left dot. Each address line must NOT extend beyond right dot. Address must not exceed four single space typing lines.

19. IN ACCORDANCE WITH NOTICE OF DISCREPANCY ON FACTORY INVOICE

a. MATERIAL: ☐ HAS BEEN ☐ WILL BE SHIPPED — DOCUMENT NUMBER

b. ☐ NO REPORT OF SHIPMENT PERSONNEL REPORT TO PROCUREMENT OFFICE UNDER APPROPRIATE REGULATION

c. ☐ AN ADJUSTMENT IN [illegible] WILL BE ☐ CREDIT ☐ DEBIT

d. ☐ [illegible] WILL [illegible]

e. ☐ AN ADJUSTMENT IN [illegible] DISCREPANCY WILL NOT BE PROCESSED FOR THE FOLLOWING REASON WHICH [illegible]

(1) [illegible]

(a) DISCREPANCY WAS NOT REPORTED WITHIN THE TIME [illegible]

(b) [illegible]

20. [illegible]

a. ☐ PROCESS FOR DISPOSAL IN ACCORDANCE WITH SERVICE AGENCY DIRECTIVES

b. ☐ REPRESENTATIVE WILL CALL FOR DISCUSSION [illegible] DAYS

c. ☐ RETAIN MATERIAL AT NO CHARGE.

d. ☐ MATERIAL WILL BE PICKED UP IN [illegible] DAYS

e. ☐ SHIP MATERIAL (Specify location):

(1) ☐ GBL APPROPRIATION CHARGEABLE:

(2) ☐ CHARGES COLLECT-VIA: ☐ FREIGHT ☐ EXPRESS ☐ PARCEL POST

(3) ☐ PARCEL POST LABEL ATTACHED (4) ☐ FREIGHT PREPAID

If ____ postage advanced here with NOTE: [illegible] cannot be returned [illegible] Post Office.

f. ☐ OTHER (Specify)

21. ☐ IF MATERIAL IS WILL REQUIRED, SUBMIT [illegible]

22. ☐ REPLACEMENT WITH SATISFACTORY MATERIAL WILL BE MADE ON [illegible] DATE

23. REMARKS (Continue on separate sheet of paper if necessary)

24a. TYPED [illegible] NAME AND [illegible] NUMBER OF PREPARING OFFICIAL

24b. SIGNATURE

24c. DATE

STANDARD FORM 344 BACK (REV. 11-79)

APPENDIX F

QUALITY EVALUATION SYSTEM: CLOSED DOCUMENT REPORT AND BREAKDOWN OF CODING

Example of DESC Quality Evaluation Report

```
ECCACOEB                    DESC  QUALITY EVALUATION REPORT (DISCREPANCY CODE)          DATE  26 JAN 79 026 PAGE 00077

ENG DISC TYP STAT      NSN        CONTRACT  QTY   DOCUMENT     RESP ITEM DISP DOLLAR SHP LST  FSCM CAUSE COND ACPT CLOSE RCVD OPT  SEQ
TE  CODE DEC CODE                 NUMBER          NUMBER       FACT  NR   CODE VALUE  CD  DTE  CODE  CODE CODE CODE DATE  DATE DATA CTRL

SUE  S5  9  N  6625008454470 78P4718      1                    1  00003  SS     13     00000  15309  CN  L    Z  78328  78305      001

**DISCREPANCY CODE  S5  TOTALS      *********34                                  *******107

SEE  T2  9  L  5999009121484 79P0273      4                    1  00100       1387     79103  17454  CN  L    D  00000  78348      001
SEE  T2  9  P  5999010365520 78MHC56     46                    1  003AA        823     79103  88219  CN  L    D  00000  78348      001
SEE  T2  9  P  5999010386683 78MHC56     46                    1  002AA        823     79103  88219  CN  L    D  00000  78348      001
SEE  T2  9  P  5999010366686 78MHC56     46                    1  001AA        823     79103  88219  CN  L    D  00000  78348      001
SEE  T2  9  P  5999010366689 78MHC56     46                    1  004AA        823     79103  88219  CN  L    D  00000  78348      001
SEE  T2  9  P  6625002111569 78MJX61      4                    1  00100       2000     79096  14814  CN  L    D  00000  78341      001
SEE  T2  9  P  6625009050325 78MFX59      5                    1  00100       2528     79128  65092  CN  L    D  00000  79008      001

**DISCREPANCY CODE  T2  TOTALS      *******197                                  *****9,207

SUE  T4  5  N  5905002361130 07MHK54     50  SC0900            1         RC     16     00000  14298  CN  L       78328  78242      001
SUE  T4  9  P  5961000117110 78MH120    723                    1               1135     00000  6M191  CN  L       78353  78338  AC  001
SUE  T4  9  K  5961001364162 78C1503     55                    1         RS      0     00000  7A241  CN  L       79024  78312  AC  002
SUE  T4  9  K  5961003468722 78ME577    117                    1         RS    523     00000  22915  CN  L       78353  78251  AC  002
SUE  T4  9  K  5961004551732 78PE419    125                    1         RS   2205     00000  89954  CN  L       78353  78275  AC  002
SUE  T4  9  K  5961004664045 78C1265     36                    1         RS   2302     00000  16758  CN  L       78353  78229  AC  002
SUE  T4  9  P  5961007525395 79M0258    920                    1               1528     79080  51182  CN  L       00000  78325  AC  001
SUE  T4  9  P  5961008377262 08C0506   2800                    1               1064     79003  07933  CN  L       00000  78248  AC  001
SEE  T4  9  K  5961008475242 77MFY55    600                    1         RM    408     00000  11961  CN  L       78353  77304  AC  001
SUE  T4  9  K  5961008475245 77MFY55    300                    1         RM    204     00000  11961  CN  L       78353  78208  AC  001
SUE  T4  9  P  5961008528654 77C4699   7277                    1               34566     79051  56289      L       00000  78296      002
SUE  T4  1  K  5961008528654 77C4699  10000                    1         RS  47500     00000  56289  CN  L       78353  78296  AC  003
SUE  T4  9  K  5961008639177 78MCY21    300                    1         RS    930     00000  07256  CN  L       78353  78265  AC  002
SUE  T4  9  K  5961010355793 79M6407     53                    1         RS    101     00000  56289  CN  L       79024  78307  AC  002
SUE  T4  9  K  5961010437075 78MDM65     72                    1         RS     32     00000  66619  CN  L       78353  78248  AC  002

**DISCREPANCY CODE  T4  TOTALS      ****23,428                                  ****92,514
```

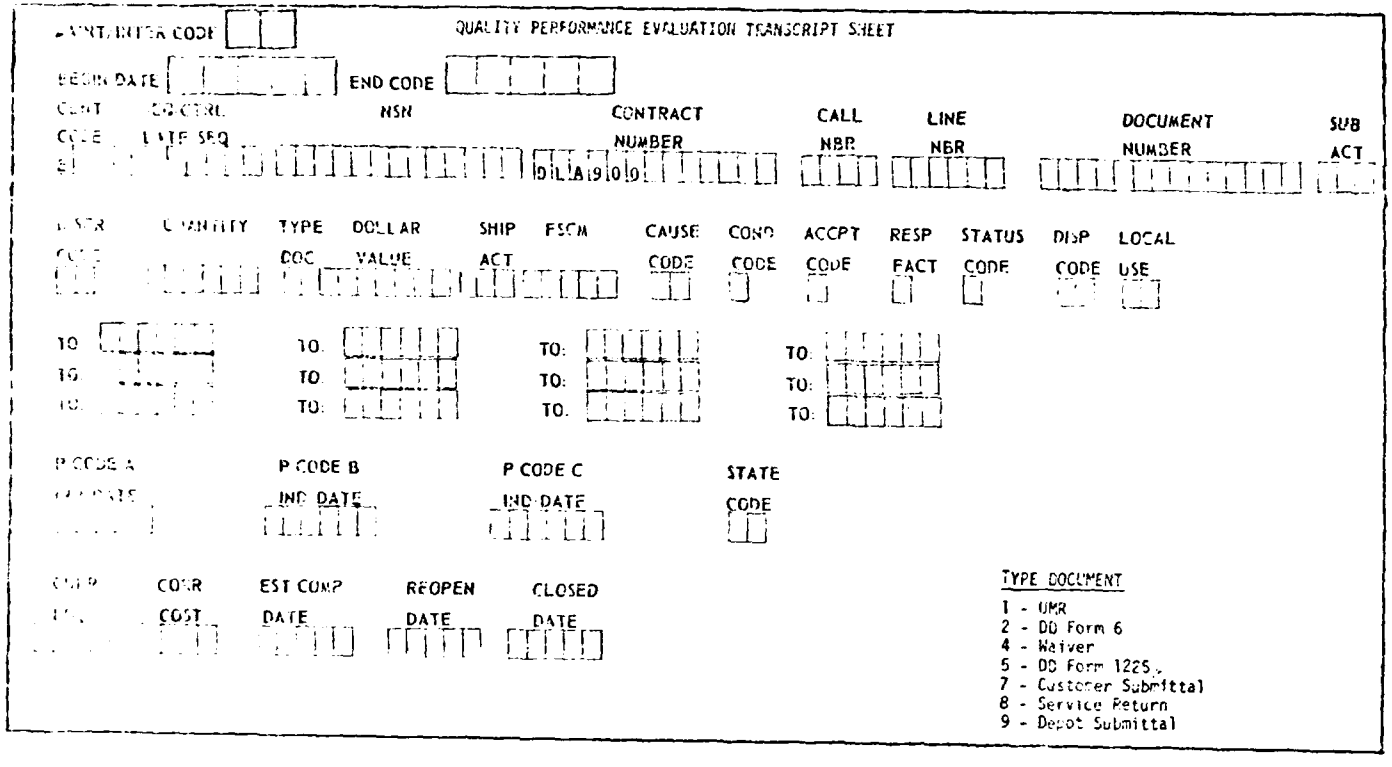

DESC Form 763
Jun 79

Quality Performance Evaluation - Data Sheet

FIELD LEGEND	CARD COLUMN	INSTRUCTIONS
Organization Submitting Complaint	1 - 3	AIR - Air Force Activity ANG - Air National Guard ARM - Army Activity GNG - Army National Guard GFP - Contractor SEE - Dayton Storage Point SUE - Defense Depot Ogden SQV - DESC SNE - New Cumberland FMA - Foreign Military Sales - Army FMF - Foreign Military Sales - Air Force FAA - Federal Aviation Agency MCA - Marine Corps Activity NAS - National Aerospace Agency NNE - Naval Supply Center Norfolk NOE - Naval Supply Center Oakland NAV - Navy Activity OTH - Other LAB - Test Project SBE - Defense Depot Tracy SME - Defense Depot Memphis FMN - Foreign Military Sales - Navy
Discrepancy Code	4 - 5	CONDITION C1 - Material received in condition other than that indicated by MILSTRIP condition code on DOD release/receipt document. DOCUMENTATION D1 - Supply documentation not received D2 - Supply documentation illegible or mutilated D3 - Supply documentation incomplete, improper or without authority BR - Billing Request STORAGE STANDARDS F1 - FSC 5900-1 (Shelf Life) F2 - FSG 5960-17 (Suspect Tubes) MISDIRECTED M1 - Misdirected shipment OVERAGE O1 - Quantity received in excess of quantity on receipt document O2 - Quantity received in excess of quantity requested O3 - Quantity received duplicates shipment SHORTAGE S1 - Quantity received less than quantity on receipt document S2 - Quantity received less than quantity requested S5 - Concealed shortage

FIELD LEGEND	CARD COLUMN	INSTRUCTIONS
Discrepancy Code (Continued)		**ITEM TECHNICAL MARKINGS** T1 - Missing T2 - Incorrect or no package markings T3 - Precautionary operational markings missing T4 - Inspection data missing or incomplete T5 - Serviceability operating data missing or incomplete T6 - Warranty data missing **WRONG ITEM** W1 - Incorrect item received W2 - Unacceptable substitute W3 - Incorrect physical size W4 - Incorrect part number W5 - Missing part number W6 - Mixed stock W7 - Incomplete **DAMAGE** X1 - Received in damaged/unserviceable condition **OTHER DISCREPANCIES** *U1 - Military Specification *U2 - Service Drawing *U3 - EIA Data *U4 - Contractor Drawing *U5 - Commercial Item *U6 - Commercial Item - No Data Available *U7 - QPL Item Z1 - Invalid UMRs Z2 - Marking Z3 - Packaging Z4 - Safety Hazard Z5 - Verification test Z6 - Rework Z7 - UR exhibit Z8 - Discrepant material Z9 - Random occurrence * - These codes will be used for both UMRs and waivers and will be entered in line item/call number field, card columns 49-53. Zeros will be used to fill to the left.
Type Document Code	6	1 - UMR 4 - Waiver/970 5 - DD Form 1225 (DP) 6 - Data Review 7 - SF 364 (Field) 8 - SF 364 (Customer Return) 9 - SF 364 (Contract Receipt)

FIELD LEGEND	CARD COLUMN	INSTRUCTIONS
Status Code (Organization having action)	7	D - DCAS E - Engineering P - Procurement C - Comptroller Q - Quality Office K - Distribution Point S - Legal Office N - DESC-O L - DESC-STS T - Laboratory Test V - Vendor/Contractor R - Rework
National Stock Number	8 - 20	Take NSN from document
Local Use	21 - 22	
Quantity	23 - 27	Number of units (prefix with blanks)
Document Number	28 - 41	Take from document - UMRs leave blank - Insert erroneous FSN or insert P/N, per instructions
PIIN	42 - 48	Omit digits 1 - 5 and 7
Line Item/Call Number	49 - 53	Take from document
Response Factor	54	Always code "1" B - Over 12 months - Case not closed - in process
Disposition Code	55 - 56	AD - Administrative Disposal SH - Destroy as Safety Hazard RI - Reidentify RM - Remark and return to stock RP - Repack and return to stock RU - Retain for Use TI - Technical Information RC - Return to Contractor RD - Return to DESC RS - Return to Stock RW - Rework LD - Local Disposal OT - Other TE - Test and Evaluation

FIELD LEGEND	CARD COLUMN	INSTRUCTIONS
Disposition Code (Continued)		ND - Not DESC Managed NR - None Required SR - Release to Stock OA - Overage Accepted OS - Over Six Months from Date of Manufacture - Accepted MA - Misdirected Shipment Accepted MR - Misdirected Shipment Reshipped SS - Short Shipment
Dollar Value	57 - 61	Take from document or contract
Shipping Activity	62	SF 364 from field only: E - Dayton N - Norfolk C - ASI from Contractor U - Ogden O - Oakland R - RDO (activities other than DP)
Center Code	63	E
FSCM Code	64 - 68	Take from H-3 or H-4 Handbook
Cause Code	69 - 70	CN - Contractor Nonconformance DE - DCAS Error EE - Engineering Error SL - Expended Shelf Life ID - Inadequate Data QA - Inadequate Quality Assurance Provisions IS - I & S Cataloging Error IE - Item/Equipment Incompatibility RH - Rough Handling RS - Used outside of specification requirements MM - Misidentified Material PE - Procurement Error CI - Service Catalog/DSA Catalog Incompatibility EL - Expended Service Life SR - Specification Revision Required US - Unauthorized Substitute UA - Unapproved Source WE - Warehouse Error OT - Other IP - Inadequate packaging requirements

FIELD LEGEND	CARD COLUMN	INSTRUCTIONS
Cause Code (Continued)		CD - Cause Cannot be Determined CE - Customer Error AP - Additional Part Number Accepted NI - Service Returns Not Inspected PD - DD Form 1716 OP - Additional Part Number Accepted (One Time) OS - Over Six Months from Date of Manufacture GA - Gidep Alert
Condition Code	71	DD 1225 or SF 364 - Take condition code from document
Acceptance Code	72	A - Amended Shipping Instructions (ASI) C - Certificate of Conformance (COC) D - Acceptance/Inspection at Designation O - Acceptance/Inspection at Origin Z - Acceptance at Destination/Inspection at Origin
Report Date	73 - 76	Completion date
Report Date	77 - 80	Use date received in Quality Assurance

APPENDIX G

ACTIVITIES AND LOCATIONS OF SHIPPER INCLUDED IN ROIDS SUBMITTED BY SAMPLE BASES

Code	Activity and Location	DODAAD Code
AKZ	US Army Tank Automotive Command Warren, MI 48090	--
B16	US Army COMMS and ELECTS MRC Attn: Dir of Mat. Management Fort Monmouth, NJ 07703	--
DAW	ANG ASST USPFO For PROP Otis AFB, MA	FB 6202
DHK	380 Bomb WG Plattsburg, N.Y.	FB 46I5
DJ5	62 MIL ALFT WG McChord AFB, WA	FB 4479
DRV	44 STRAT MSL WG Ellsworth AFB, SD	FB 6411
DSB	31 STRAT MSL WG Minot AFB, ND	FB 4528
FFB	Depot Supply Sacramento ALC McClellan AFB, CA	FB 2049
FFZ	Air Force Materiel Sacramento ALC McClellan AFB, CA	FD 2040
FGB	Depot Supply Odgen ALC Hill AFB, UT	FB 2029
FGZ	Air Force Materiel Ogden ALC Hill AFB, UT	FD 2020
FHB	Depot Supply Oklahoma City ALC Tinker AFB, OK	FB 2039
FHZ	Air Force Materiel Oklahoma City ALC Tinker AFB, OK	FD 2030

Code	Activity and Location	DODAAD Code
FLB	Depot Supply Warner Robins ALC Robins AFB, GA	FB 2065
FLZ	Air Force Materiel Warner Robins ALC Robins AFB, GA	FD 2060
FPB	Depot Supply San Antonio ALC Kelly AFB, TX	FB 2059
FPZ	Air Force Materiel San Antonio ALC Kelly AFB, TX	FD 2050
GAO	GSA FSS Customer Service and Supply Division 1776 Peachtree St, NW Atlanta, GA 30309	GAC 000
GCO	GSA FSS Customer Service and Supply Division 230 Dearborn St. Chicago, IL 60604	GCC 000
GFO	GSA FSS Customer Service and Supply Division 819 Taylor St. Fort Worth, TX 76102	GFC 004
GGO	GSA Central Office FPI Inventory Management Division Washington DC, 20406	GG 0001
GKO	GSA FSS Customer Service and Supply Division 1500 E. Bannister Road Kansas City, MO 64131	GKC 000
GK6	GSA Credit Returns Activity Midwest 1500 E. Bannister Road Kansas City, MO 64131	GK 0004
GNO	GSA FSS Customer Service and Supply Division 26 Federal Plaza New York, NY 10007	GNC 000

Code	Activity and Location	DODAAD Code
GSO	GSA FSS Customer Service and Supply Division 525 Market Street San Francisco, CA 34105	GSC 000
GTO	GSA FSS Customer Service and Supply Division GSA Center Auburn, WA 98002	GTC 000
GWO	GSA FSS Customer Service and Supply Division 7th and D Streets, SW Washington DC 20407	GWC 000
N32	Navy Materiel Aviation Supply Office Philadelphia, PA 19111	N 00383
S9C	Defense Construction Supply Center Columbus, OH 43215	SC 0700
S9E	Defense Electronics Supply Center 1507 Wilmington Pike Dayton, OH 45444	SC 0900
S9G	Defense General Supply Center Richmond, VA 23219	SC 0400
S9I	Defense Industrial Supply Center 700 Robbins Avenue Philadelphia, PA 19111	SC 0500
S9M	Defense Personnel Support Center Directorate of Medical Materiel 2800 South 20th Street Philadelphia, PA 19101	SC 0200
S9Q	Defense Industrial Plant Equipment Center Contractor Inv. Redistribution Syst. Memphis, TN 38114	SE 4300
S9R	Defense Industrial Plant Equip. Center Memphis TN 38114	SE 4300
S9T	Defense Personnel Support Center Directorate of Clothing and Textile 2800 South 20th Street Philadelphia, PA 19101	SC 0100

APPENDIX H

FREQUENCY DISTRIBUTIONS OF THE CAUSES OF DISCREPANCIES BASED ON SAMPLE DESC REPORTS

TABLE H-1

Frequency Distribution of All Causes
Listed in DESC Sample Data Base

CAUSE DESC DETERMINED CAUSE OF DISCREPANCY

CATEGORY LABEL	CODE	ABSOLUTE FREQ	RELATIVE FREQ (PCT)	ADJUSTED FREQ (PCT)	CUM FREQ (PCT)
WAREHOUSE ERROR-WE	1.	1487	72.3	72.3	72.3
OTHER REASONS-OT	2.	86	4.2	4.2	76.4
UNDETERMIN CAUSE-CD	3.	14	0.7	0.7	77.1
CONTRACT NONCONF-CN	4.	39	1.9	1.9	79.0
INVALID REQUEST-ZI	5.	4	0.2	0.2	79.2
SPEC REVISION-SR	6.	2	0.1	0.1	79.3
MISIDENTIFIED-MM	7.	10	0.5	0.5	79.8
ROUGH HANDLING-RH	8.	6	0.3	0.3	80.1
EXPENDED SER LIFE-EL	9.	1	0.0	0.0	80.1
INADEQUATE PACK-IP	10.	2	0.1	0.1	80.2
CATALOG ERROR-IS	11.	12	0.6	0.6	80.8
INCOMPATIBILITY-IE	12.	17	0.8	0.8	81.6
INADEQUATE DATA-ID	13.	3	0.1	0.1	81.8
CUSTOMER ERROR-CE	14.	11	0.5	0.5	82.3
EXPEND SHELF LIFE-SL	15.	1	0.0	0.0	82.4
BLANK FIELD	16.	363	17.6	17.6	100.0
	TOTAL	2058	100.0	100.0	

TABLE H-2

Frequency Distribution of All Types of
Discrepancies in DESC Sample Data Base

DISCREP TYPE OF DISCREPANCY REPORTED

CATEGORY LABEL	CODE	ABSOLUTE FREQ	RELATIVE FREQ (PCT)	ADJUSTED FREQ (PCT)	CUM FREQ (PCT)
NO DOCUMENTATION	1.	14	0.7	0.7	0.7
ALL OVERAGES	2.	136	6.6	6.6	7.3
INCORRECT ITEMS	3.	768	37.3	37.3	44.6
ALL SHORTAGES	4.	1020	49.6	49.6	94.2
DEFECTIVE ITEMS	5.	59	2.9	2.9	97.0
MISDIRECTED SHIPMENT	6.	23	1.1	1.1	98.2
UNSPECIFIED-Z1 TO Z8	7.	31	1.5	1.5	99.7
BILLING ERROR	8.	5	0.2	0.2	99.9
STORAGE STANDARDS	9.	2	0.1	0.1	100.0
	TOTAL	2058	100.0	100.0	

TABLE H-3

Frequency Distribution of All
Causes for Shortages

CAUSE DESC DETERMINED CAUSE OF DISCREPANCY

CATEGORY LABEL	CODE	ABSOLUTE FREQ	RELATIVE FREQ (PCT)	ADJUSTED FREQ (PCT)	CUM FREQ (PCT)
WAREHOUSE ERROR-WE	1.	742	72.7	72.7	72.7
OTHER REASONS-OT	2.	28	2.7	2.7	75.5
CONTRACT NONCONF-CN	4.	10	1.0	1.0	76.5
CUSTOMER ERROR-CE	14.	2	0.2	0.2	76.7
BLANK FIELD	16.	238	23.3	23.3	100.0
	TOTAL	1020	100.0	100.0	

TABLE H-4

Frequency Distribution of All
Causes for Overages

CAUSE DESC DETERMINED CAUSE OF DISCREPANCY

CATEGORY LABEL	CODE	ABSOLUTE FREQ	RELATIVE FREQ (PCT)	ADJUSTED FREQ (PCT)	CUM FREQ (PCT)
WAREHOUSE ERROR-WE	1.	106	77.9	77.9	77.9
OTHER REASONS-OT	2.	2	1.5	1.5	79.4
CONTRACT NONCONF-CN	4.	1	0.7	0.7	80.1
CUSTOMER ERROR-CE	14.	3	2.2	2.2	82.4
BLANK FIELD	16.	24	17.6	17.6	100.0
	TOTAL	136	100.0	100.0	

TABLE H-5

Frequency Distribution of All
Causes for Incorrect Items

CAUSE DESC DETERMINED CAUSE OF DISCREPANCY

CATEGORY LABEL	CODE	ABSOLUTE FREQ	RELATIVE FREQ (PCT)	ADJUSTED FREQ (PCT)	CUM FREQ (PCT)
WAREHOUSE ERROR-WE	1.	609	79.3	79.3	79.3
OTHER REASONS-OT	2.	34	4.4	4.4	83.7
UNDETERMIN CAUSE-CD	3.	10	1.3	1.3	85.0
CONTRACT NONCONF-CN	4.	9	1.2	1.2	86.2
INVALID REQUEST-ZI	5.	3	0.4	0.4	86.6
SPEC REVISION-SR	6.	2	0.3	0.3	86.8
MISIDENTIFIED-MM	7.	10	1.3	1.3	88.2
CATALOG ERROR-IS	11.	10	1.3	1.3	89.5
INCOMPATIBILITY-IE	12.	1	0.1	0.1	89.6
INADEQUATE DATA-ID	13.	3	0.4	0.4	90.0
CUSTOMER ERROR-CE	14.	6	0.8	0.8	90.8
BLANK FIELD	16.	71	9.2	9.2	100.0
	TOTAL	768	100.0	100.0	

TABLE H-6

Frequency Distribution of All

Causes for Defective Shipments

CAUSE DESC DETERMINED CAUSE OF DISCREPANCY

CATEGORY LABEL	CODE	ABSOLUTE FREQ	RELATIVE FREQ (PCT)	ADJUSTED FREQ (PCT)	CUM FREQ (PCT)
WAREHOUSE ERROR-WE	1.	4	6.8	6.8	6.8
OTHER REASONS-OT	2.	16	27.1	27.1	33.9
UNDETERMIN CAUSE-CD	3.	4	6.8	6.8	40.7
CONTRACT NONCONF-CN	4.	6	10.2	10.2	50.8
INVALID REQUEST-ZI	5.	1	1.7	1.7	52.5
ROUGH HANDLING-RH	8.	5	8.5	8.5	61.0
EXPENDED SER LIFE-EL	9.	1	1.7	1.7	62.7
INADEQUATE PACK-IP	10.	1	1.7	1.7	64.4
CATALOG ERROR-IS	11.	1	1.7	1.7	66.1
INCOMPATIBILITY-IE	12.	12	20.3	20.3	86.4
BLANK FIELD	16.	8	13.6	13.6	100.0
	TOTAL	59	100.0	100.0	

TABLE H-7

Frequency Distribution of All
Causes for Misdirected Shipments

CAUSE DESC DETERMINED CAUSE OF DISCREPANCY

CATEGORY LABEL	CODE	ABSOLUTE FREQ	RELATIVE FREQ (PCT)	ADJUSTED FREQ (PCT)	CUM FREQ (PCT)
WAREHOUSE ERROR-WE	1.	15	65.2	65.2	65.2
OTHER REASONS-OT	2.	1	4.3	4.3	69.6
BLANK FIELD	16.	7	30.4	30.4	100.0
	TOTAL	23	100.0	100.0	

TABLE H-8

Frequency Distribution of All
Causes for Billing Errors

CAUSE DESC DETERMINED CAUSE OF DISCREPANCY

CATEGORY LABEL	CODE	ABSOLUTE FREQ	RELATIVE FREQ (PCT)	ADJUSTED FREQ (PCT)	CUM FREQ (PCT)
WAREHOUSE ERROR-WE	1.	1	20.0	20.0	20.0
OTHER REASONS-OT	2.	1	20.0	20.0	40.0
BLANK FIELD	16.	3	60.0	60.0	100.0
	TOTAL	5	100.0	100.0	

TABLE H-9

Frequency Distribution of All

Causes for Unspecified Reasons

CAUSE DESC DETERMINED CAUSE OF DISCREPANCY

CATEGORY LABEL	CODE	ABSOLUTE FREQ	RELATIVE FREQ (PCT)	ADJUSTED FREQ (PCT)	CUM FREQ (PCT)
WAREHOUSE ERROR-WE	1.	3	9.7	9.7	9.7
OTHER REASONS-OT	2.	3	9.7	9.7	19.4
CONTRACT NONCONF-CN	4.	9	29.0	29.0	48.4
ROUGH HANDLING-RH	8.	1	3.2	3.2	51.6
INADEQUATE PACK-IP	10.	1	3.2	3.2	54.8
CATALOG ERROR-IS	11.	1	3.2	3.2	58.1
INCOMPATIBILITY-IE	12.	4	12.9	12.9	71.0
BLANK FIELD	16.	9	29.0	29.0	100.0
	TOTAL	31	100.0	100.0	

TABLE H-10

Frequency Distribution of All
Causes for No Documentation

CAUSE DESC DETERMINED CAUSE OF DISCREPANCY

CATEGORY LABEL	CODE	ABSOLUTE FREQ	RELATIVE FREQ (PCT)	ADJUSTED FREQ (PCT)	CUM FREQ (PCT)
WAREHOUSE ERROR-WE	1.	6	42.9	42.9	42.9
OTHER REASONS-OT	2.	1	7.1	7.1	50.0
CONTRACT NONCONF-CN	4.	4	28.6	28.6	78.6
BLANK FIELD	16.	3	21.4	21.4	100.0
	TOTAL	14	100.0	100.0	

TABLE H-11

Frequency Distribution of All
Causes for Storage Standards

CAUSE DESC DETERMINED CAUSE OF DISCREPANCY

CATEGORY LABEL	CODE	ABSOLUTE FREQ	RELATIVE FREQ (PCT)	ADJUSTED FREQ (PCT)	CUM FREQ (PCT)
WAREHOUSE ERROR-WE	1.	1	50.0	50.0	50.0
EXPEND SHELF LIFE-SL	15.	1	50.0	50.0	100.0
	TOTAL	2	100.0	100.0	

APPENDIX I

PROCESS FLOW CHART

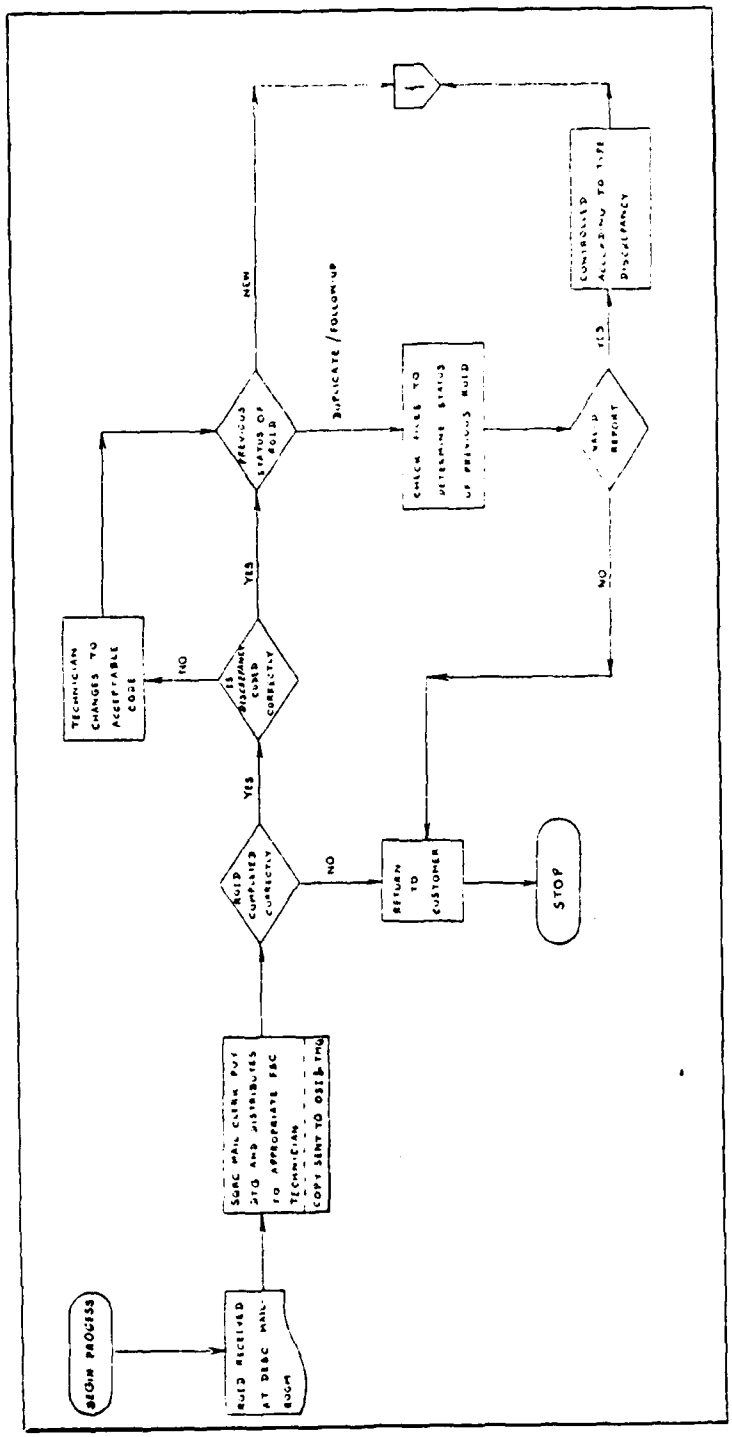
BEGIN PROCESS
ROID RECEIVED AT DESC MAIL ROOM
SGRC MAIL CLERK PUT DTG AND DISTRIBUTES TO APPROPRIATE FSC TECHNICIAN
COPY SENT TO OSI & TMG
ROID COMPLETED CORRECTLY
NO
RETURN TO CUSTOMER
STOP
YES
IS DISCREPANCY CODED CORRECTLY
NO
TECHNICIAN CHANGES TO ACCEPTABLE CODE
YES
PREVIOUS STATUS OF ROID
NEW
DUPLICATE / FOLLOW-UP
CHECK FILES TO DETERMINE STATUS OF PREVIOUS ROID
VALID REPORT
YES
CONTROLLED ACCORDING TO TYPE DISCREPANCY
NO

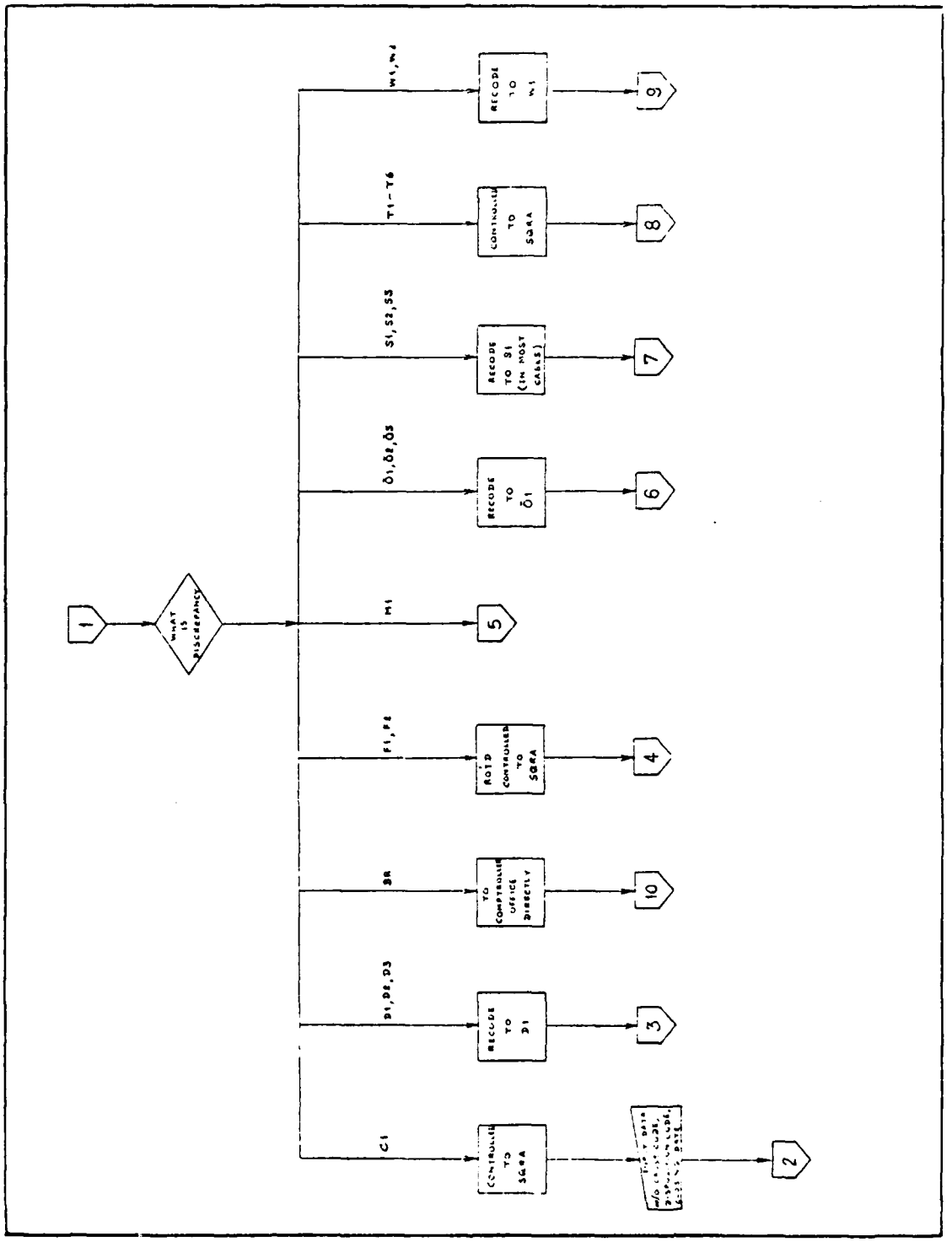

THIS PAGE IS BEST QUALITY PRACTICABLE
FROM COPY FURNISHED TO DDC

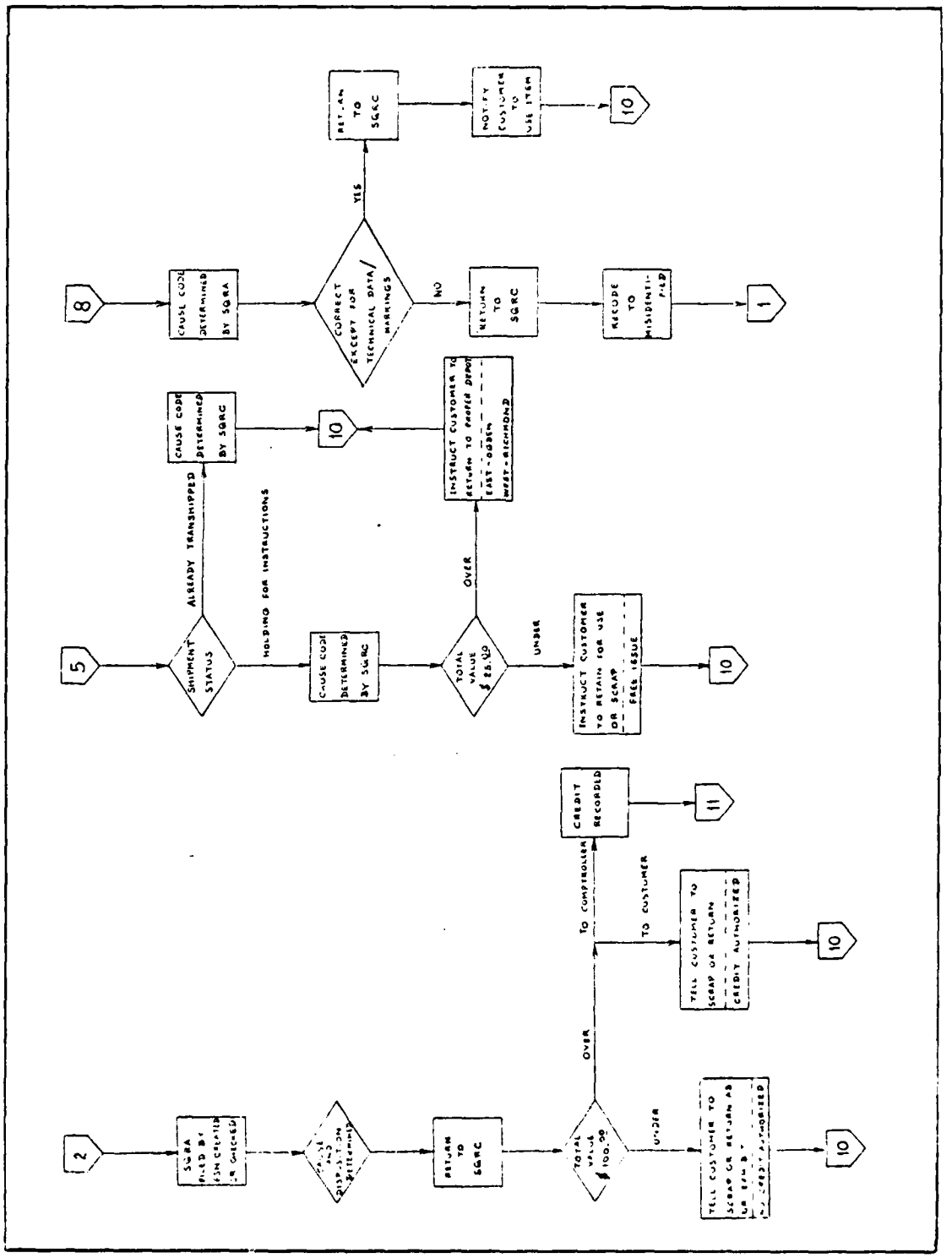
2
SGRA FILED BY FSN CREATED OR CHECKED
CAUSE AND DISPOSITION DETERMINED
RETURN TO SGRC
TOTAL VALUE $100.00
UNDER
TELL CUSTOMER TO SCRAP OR RETURN AS OR EAM BY
NO CREDIT AUTHORIZED
10
OVER
TO COMPTROLLER
CREDIT RECORDED
11
TO CUSTOMER
TELL CUSTOMER TO SCRAP OR RETURN
CREDIT AUTHORIZED
10
5
SHIPMENT STATUS
ALREADY TRANSHIPPED
CAUSE CODE DETERMINED BY SGRC
10
HOLDING FOR INSTRUCTIONS
CAUSE CODE DETERMINED BY SGRC
TOTAL VALUE $25.00
OVER
INSTRUCT CUSTOMER TO RETURN TO PROPER DEPOT
EAST - OGDEN
WEST - RICHMOND
UNDER
INSTRUCT CUSTOMER TO RETAIN FOR USE OR SCRAP
FREE ISSUE
10
8
CAUSE CODE DETERMINED BY SGRA
CORRECT EXCEPT FOR TECHNICAL DATA/ MARKINGS
YES
RETURN TO SGRC
NOTIFY CUSTOMER TO USE ITEM
10
NO
RETURN TO SGRC
RECODE TO MISIDENTIFIED
1

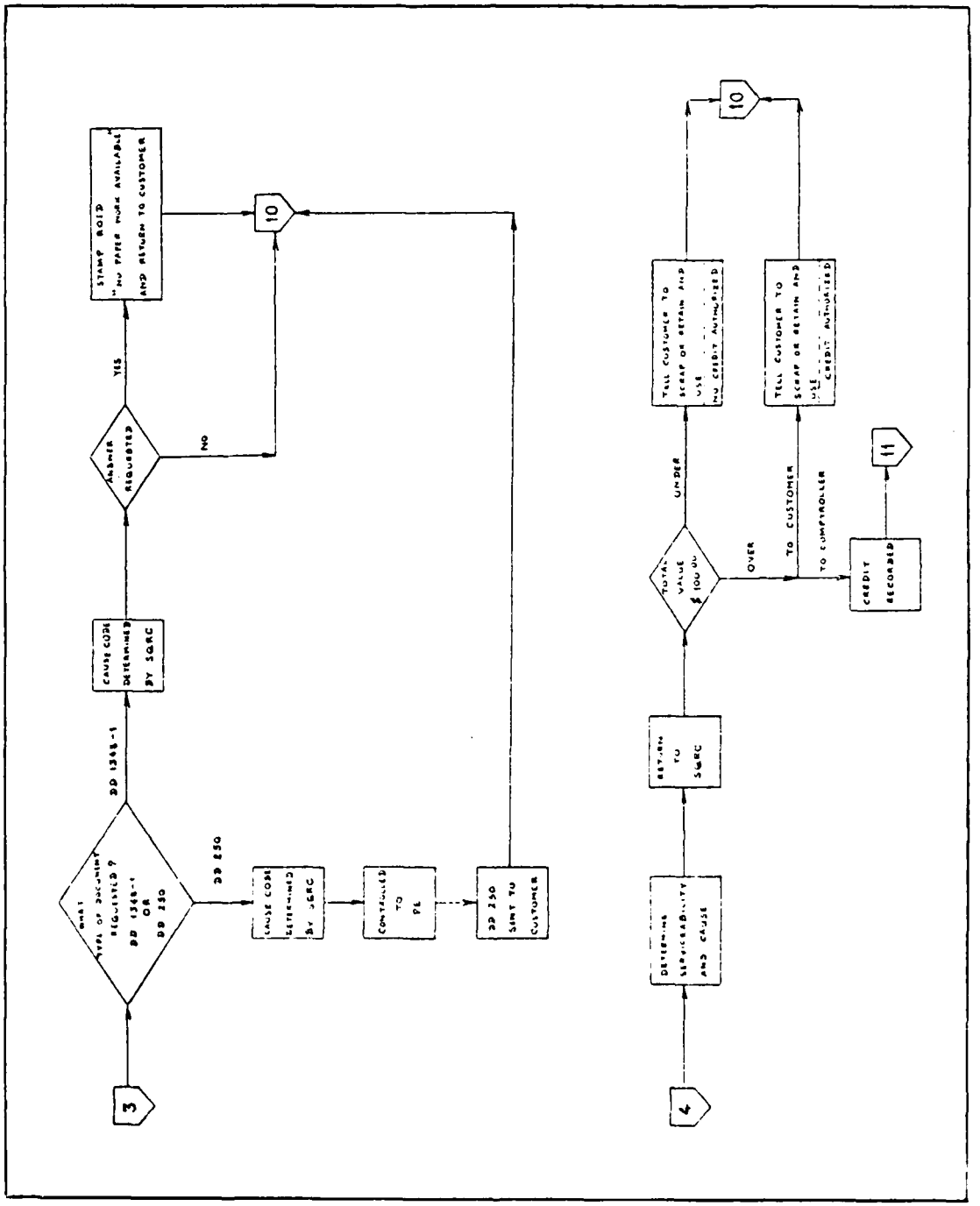
3
DD 1348-1
DD 250
CAUSE CODE DETERMINED BY SQRC
CAUSE CODE DETERMINED BY SQRC
CONTRACTOR TO PL
DD 250 SENT TO CUSTOMER
YES
NO
STAMP VOID "NO PAPER WORK AVAILABLE" AND RETURN TO CUSTOMER
10
4
DETERMINE SERVICEABILITY AND CAUSE
RETURN TO SQRC
UNDER
OVER
TO CUSTOMER
TO COMPTROLLER
TELL CUSTOMER TO SCRAP OR RETAIN AND USE NO CREDIT AUTHORIZED
TELL CUSTOMER TO SCRAP OR RETAIN AND USE CREDIT AUTHORIZED
10
11
CREDIT RECORDED

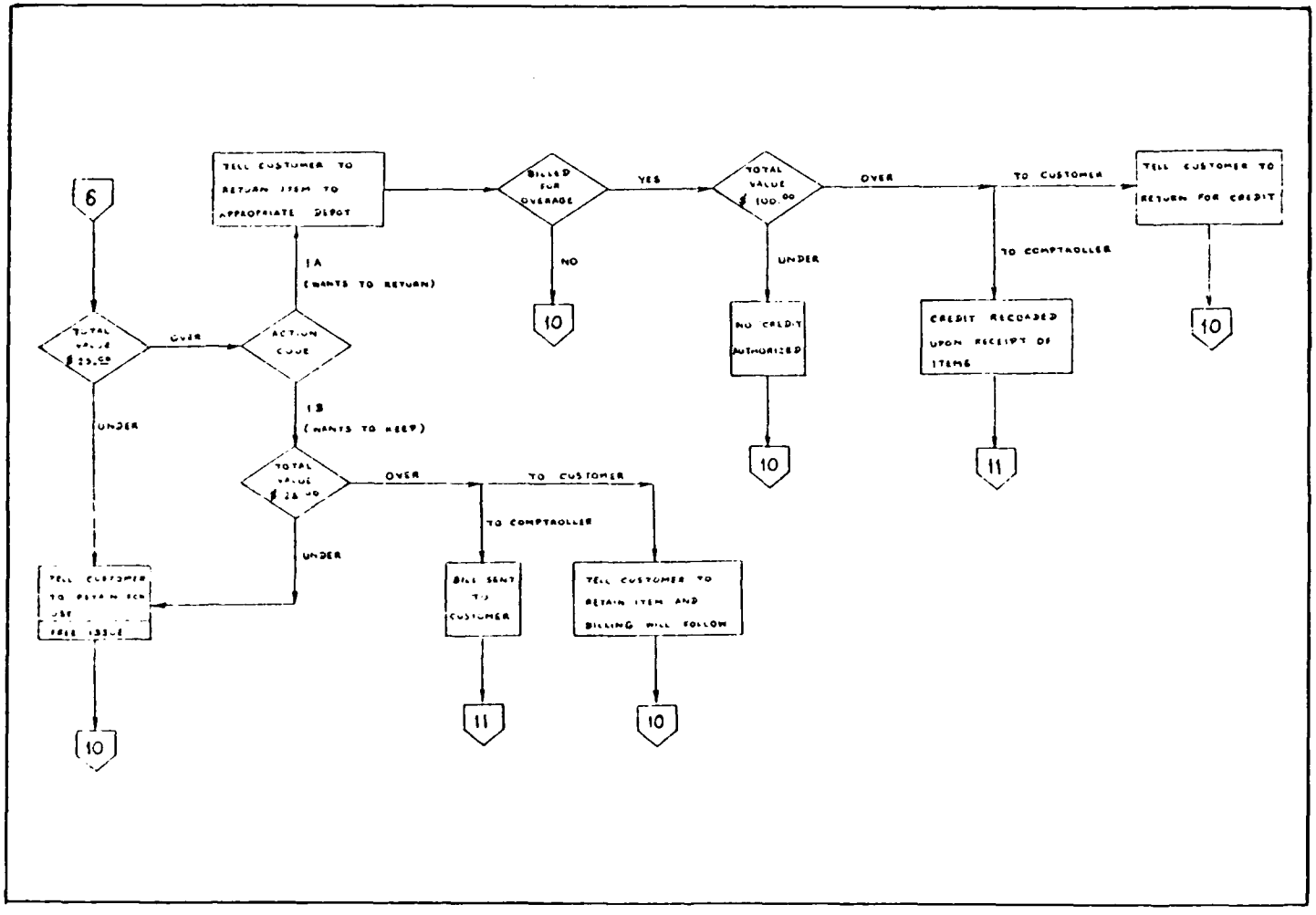
6
TELL CUSTOMER TO RETURN ITEM TO APPROPRIATE DEPOT
BILLED FOR OVERAGE
YES
NO
10
TOTAL VALUE $ 100.00
OVER
UNDER
TO CUSTOMER
TO COMPTROLLER
TELL CUSTOMER TO RETURN FOR CREDIT
10
NO CREDIT AUTHORIZED
10
CREDIT RECOADED UPON RECEIPT OF ITEMS
11
1A (WANTS TO RETURN)
TOTAL VALUE $ 25.00
OVER
ACTION CODE
1B (WANTS TO KEEP)
UNDER
TOTAL VALUE $ 25.00
OVER
TO CUSTOMER
TO COMPTROLLER
UNDER
TELL CUSTOMER TO RETAIN ITEM USE FREE ISSUE
10
BILL SENT TO CUSTOMER
11
TELL CUSTOMER TO RETAIN ITEM AND BILLING WILL FOLLOW
10

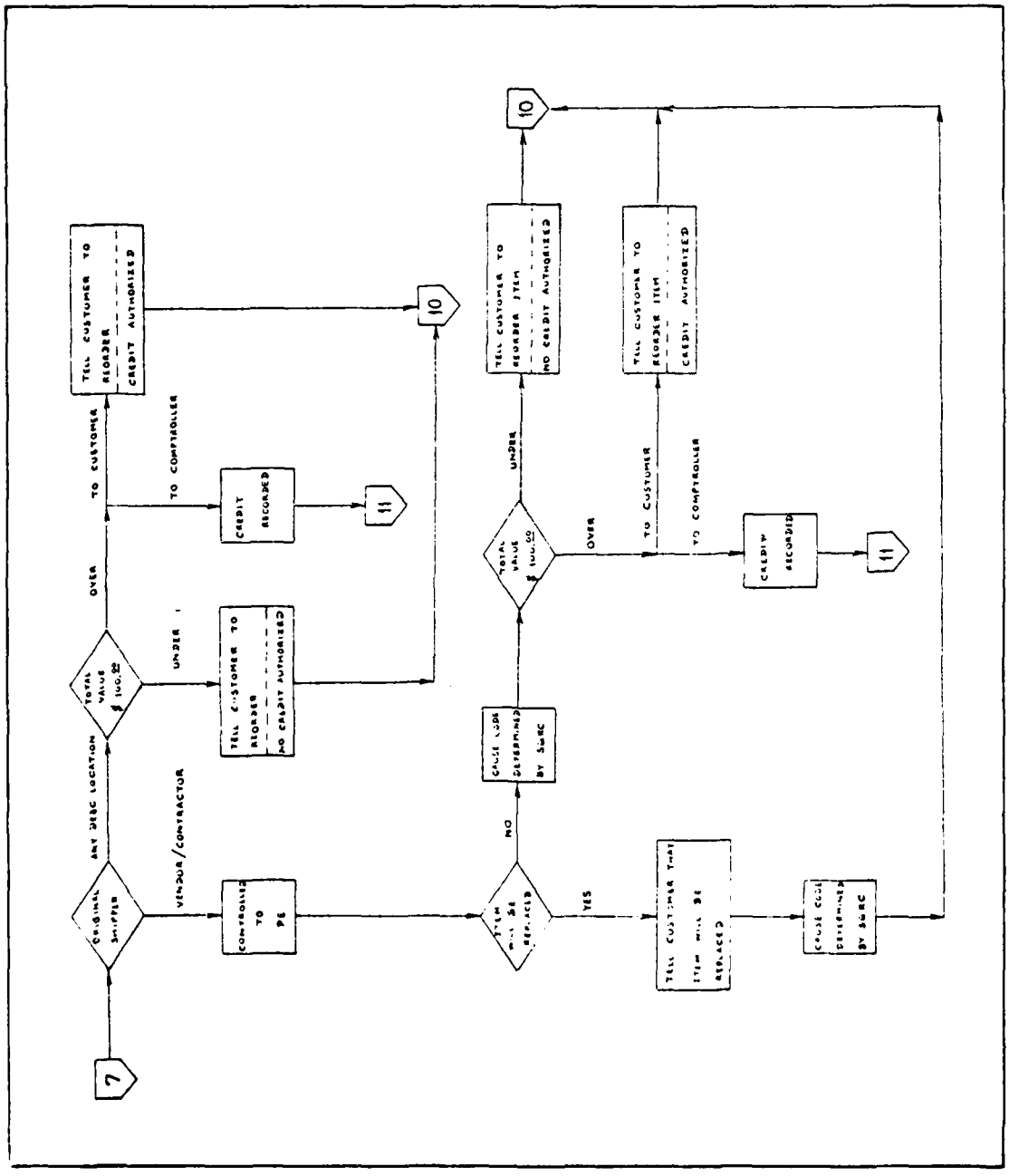
7
ORIGINAL SHIPPER
ANY DESC LOCATION
VENDOR/CONTRACTOR
CONTROLLER TO PE
ITEM WILL BE REPLACED
NO
YES
CAUSE CODE DETERMINED BY SUBC
TELL CUSTOMER THAT ITEM WILL BE REPLACED
CAUSE CODE DETERMINED BY SUBC
TOTAL VALUE $100.00
UNDER
OVER
TELL CUSTOMER TO REORDER ITEM NO CREDIT AUTHORIZED
TELL CUSTOMER TO REORDER ITEM CREDIT AUTHORIZED
TO CUSTOMER
TO COMPTROLLER
CREDIT RECORDED
TOTAL VALUE $100.00
UNDER
OVER
TELL CUSTOMER TO REORDER NO CREDIT AUTHORIZED
TELL CUSTOMER TO REORDER CREDIT AUTHORIZED
TO CUSTOMER
TO COMPTROLLER
CREDIT RECORDED
10
10
11
11

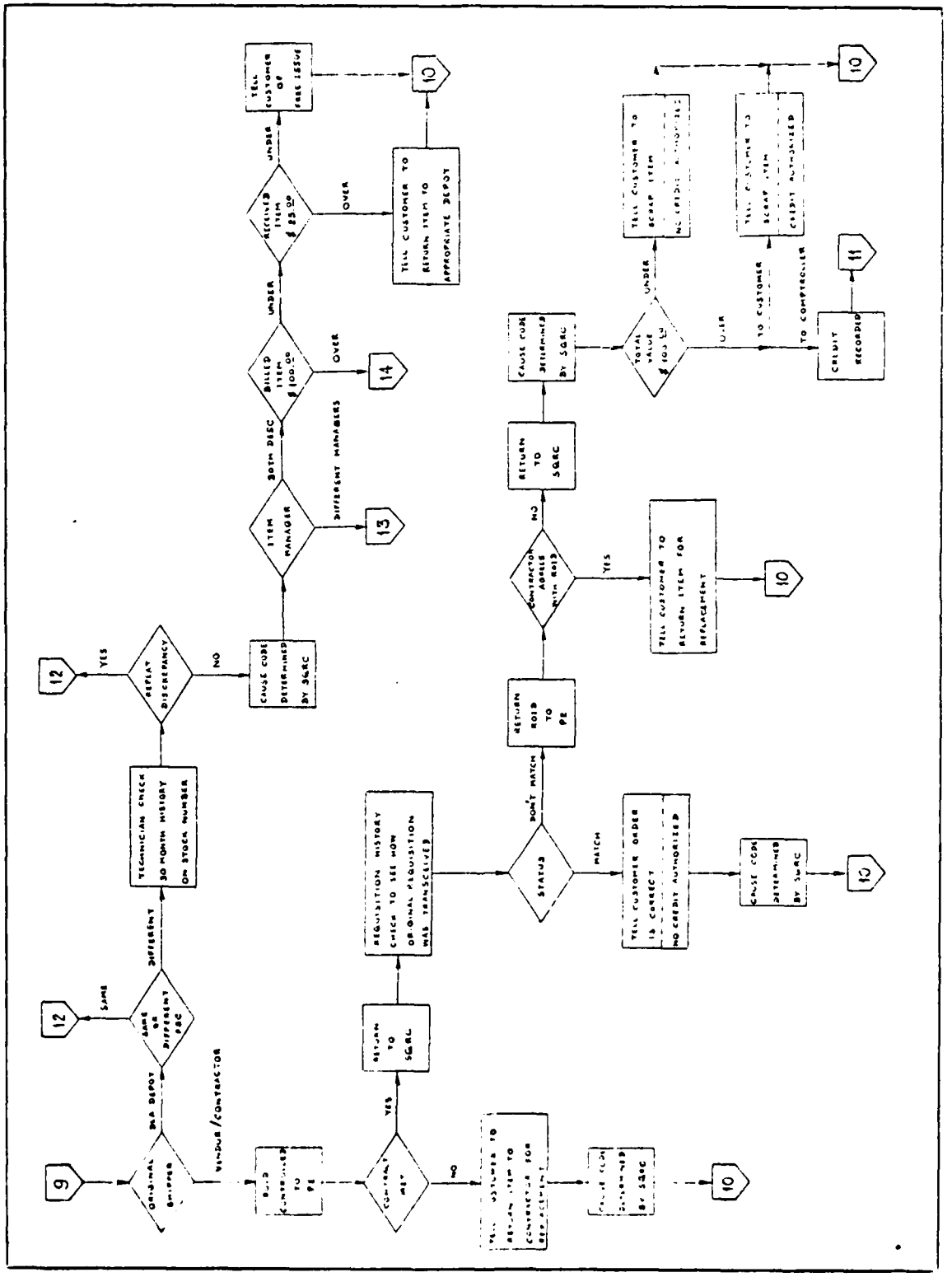
9
ORIGINAL SHIPPER
DLA DEPOT
VENDOR/CONTRACTOR
SAME AS DIFFERENT FSC
SAME
DIFFERENT
12
TECHNICIAN CHECK 30 MONTH HISTORY ON STOCK NUMBER
REPLAY DISCREPANCY
YES
NO
12
CAUSE CODE DETERMINED BY SQRC
ITEM MANAGER
BOTH DISC
DIFFERENT MANAGERS
13
BILLED ITEM $100.00
UNDER
OVER
14
RECEIVED ITEM $25.00
UNDER
OVER
TELL CUSTOMER TO RETURN ITEM TO APPROPRIATE DEPOT
TELL CUSTOMER OF FREE ISSUE
10
RETURN TO SQRC
YES
NO
REQUISITION HISTORY CHECK TO SEE HOW ORIGINAL REQUISITION WAS TRANSCEIVED
STATUS
MATCH
DON'T MATCH
RETURN ROID TO PE
RETURN TO SQRC
CONTRACTOR AGREE WITH ROID
YES
NO
TELL CUSTOMER TO RETURN ITEM FOR REPLACEMENT
10
CAUSE CODE DETERMINED BY SQRC
TOTAL VALUE $100.00
UNDER
OVER OR
TELL CUSTOMER TO SCRAP ITEM NO CREDIT AUTHORIZED
TELL CUSTOMER TO SCRAP ITEM CREDIT AUTHORIZED
TO CUSTOMER
TO COMPTROLLER
11
CREDIT RECORDED
10
TELL CUSTOMER NO CREDIT AUTHORIZED
CAUSE CODE DETERMINED BY SQRC
10
10

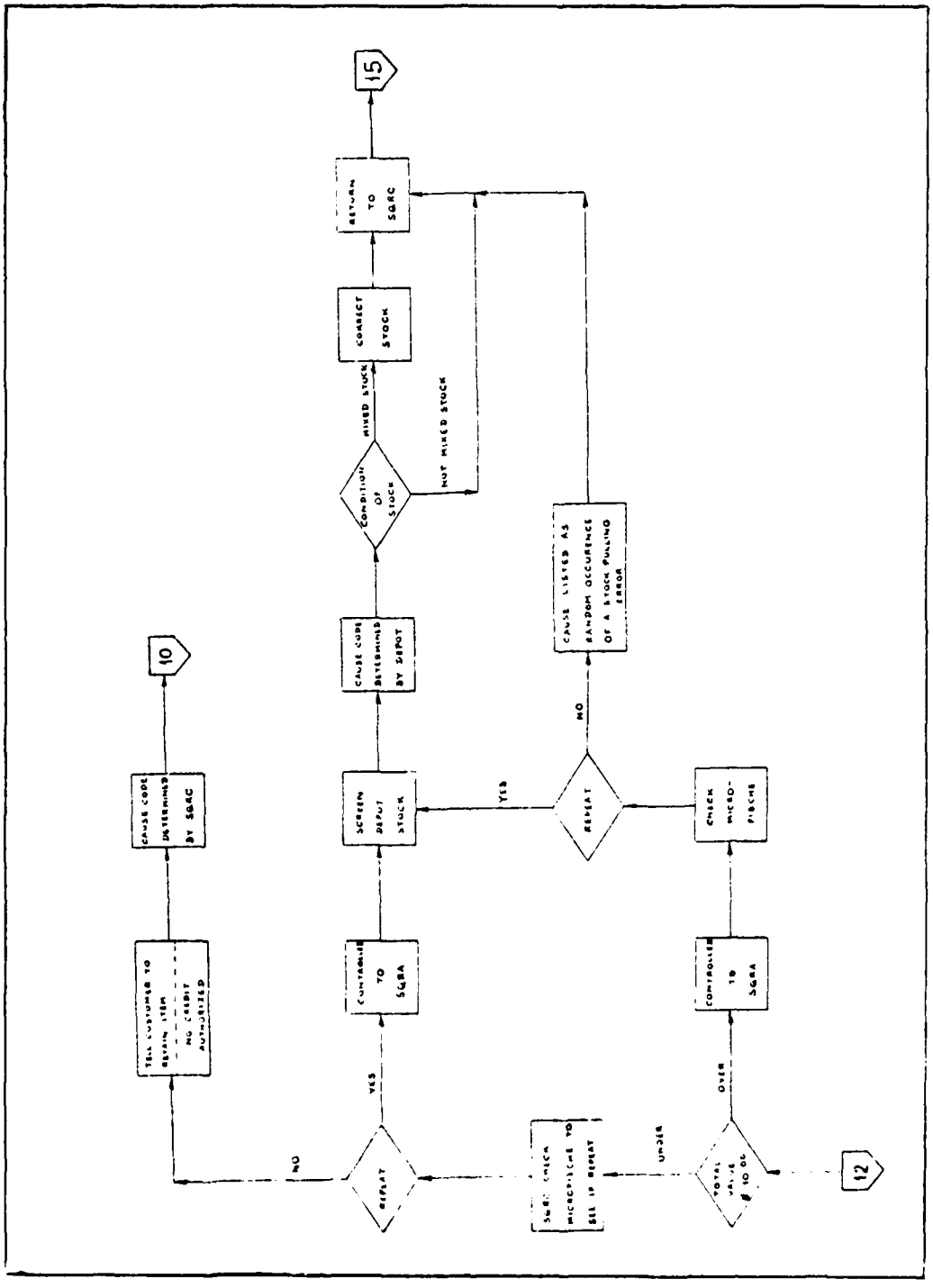

THIS PAGE IS BEST QUALITY AVAILABLE
FROM COPY FURNISHED TO DTIC

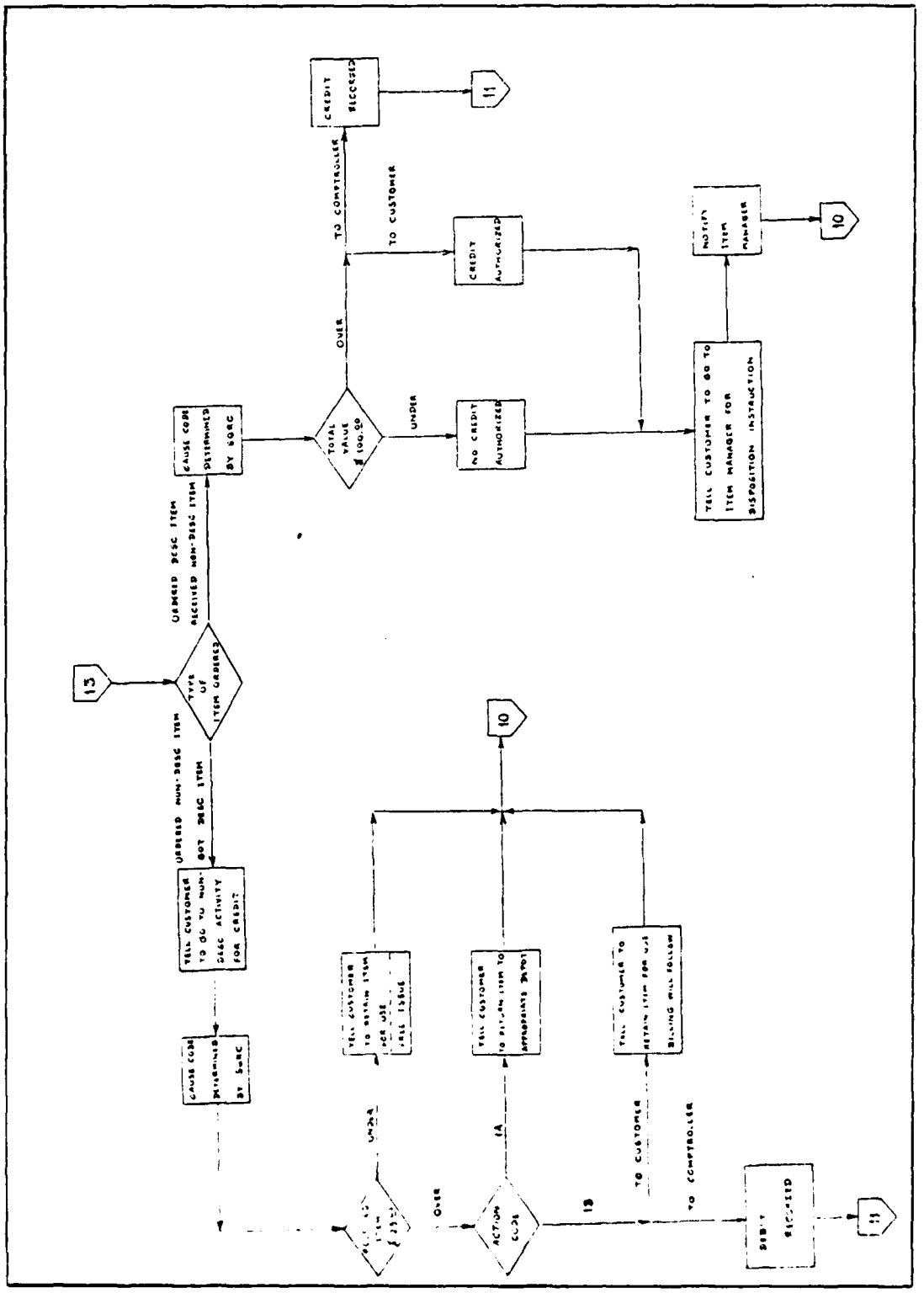
CREDIT BLOCKED
11
TO CONTROLLER
TO CUSTOMER
CREDIT AUTHORIZED
NOTIFY ITEM MANAGER
10
OVER
UNDER
TOTAL VALUE ≤ 100.00
CAUSE CODE DETERMINED BY SOHC
NO CREDIT AUTHORIZED
TELL CUSTOMER TO GO TO ITEM MANAGER FOR DISPOSITION INSTRUCTION
UNREAD DESC ITEM
RECEIVED NON-DESC ITEM
TYPE OF ITEM ORDERED
13
UNREAD NON-DESC ITEM
GOT DESC ITEM
TELL CUSTOMER TO GO TO NON-DESC ACTIVITY FOR CREDIT
CAUSE CODE DETERMINED BY SOHC
10
TELL CUSTOMER TO RETAIN ITEM FOR USE
FREE ISSUE
TELL CUSTOMER TO RETURN ITEM TO APPROPRIATE DEPOT
TELL CUSTOMER TO RETAIN ITEM FOR USE
BILLING WILL FOLLOW
UNDER
OVER
ACTION CODE
TO CUSTOMER
TO COMPTROLLER
CREDIT RECEIVED
11

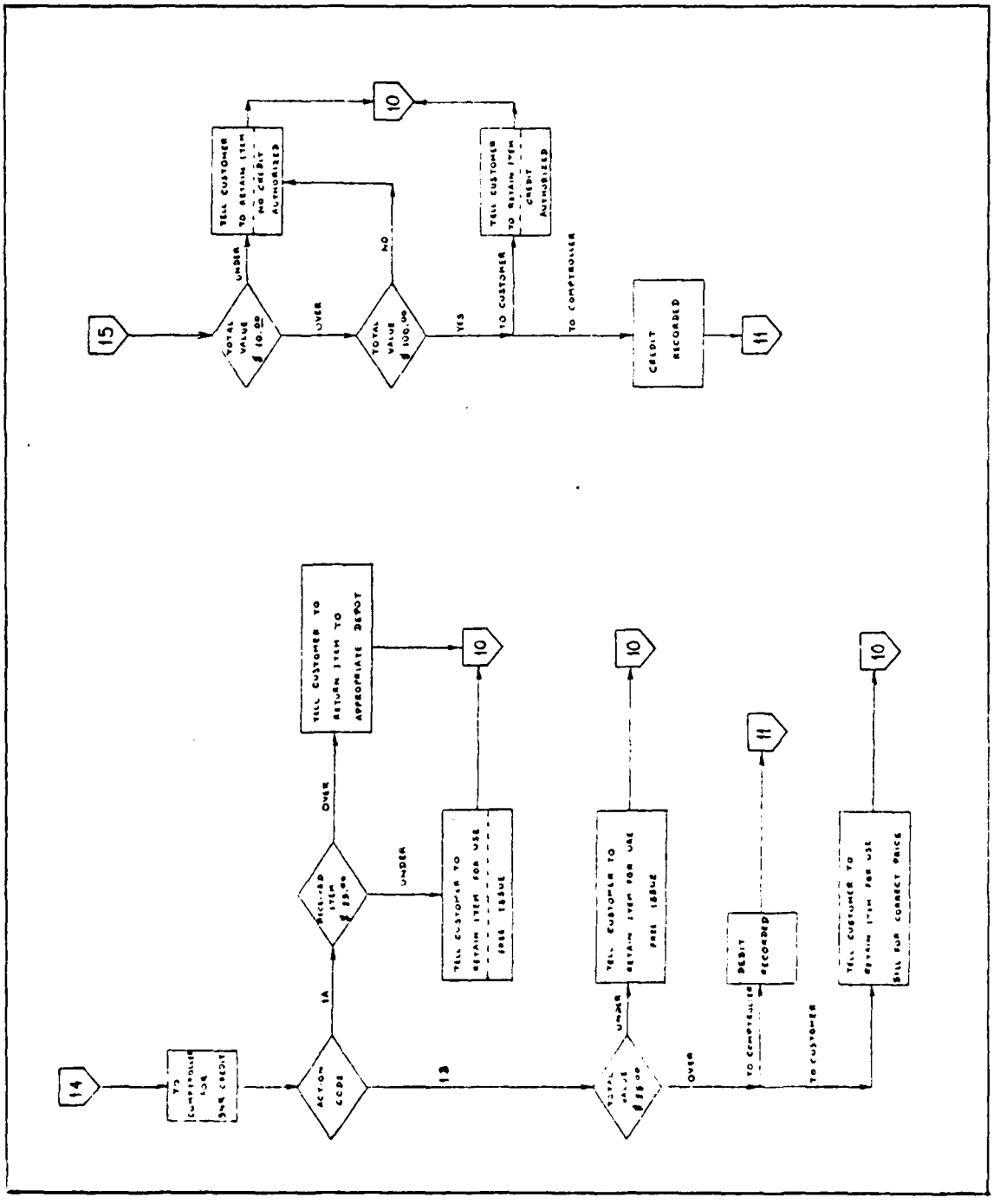
15
TOTAL VALUE £10.00
UNDER
OVER
TELL CUSTOMER TO RETAIN ITEM - NO CREDIT - AUTHORISED
10
TOTAL VALUE £100.00
NO
YES
TELL CUSTOMER TO RETAIN ITEM - CREDIT - AUTHORISED
TO CUSTOMER
TO COMPTROLLER
CREDIT RECORDED
11
14
TO COMPTROLLER FOR SAME CREDIT
ACTION CODE
1A
1B
OVER
TELL CUSTOMER TO RETAIN ITEM FOR USE
UNDER
TELL CUSTOMER TO RETAIN ITEM TO APPROPRIATE DEPOT
TOTAL VALUE £5.00
DEBIT RECORDED
TO COMPTROLLER
TO CUSTOMER
TELL CUSTOMER TO RETAIN ITEM FOR USE
BILL FOR CORRECT PRICE

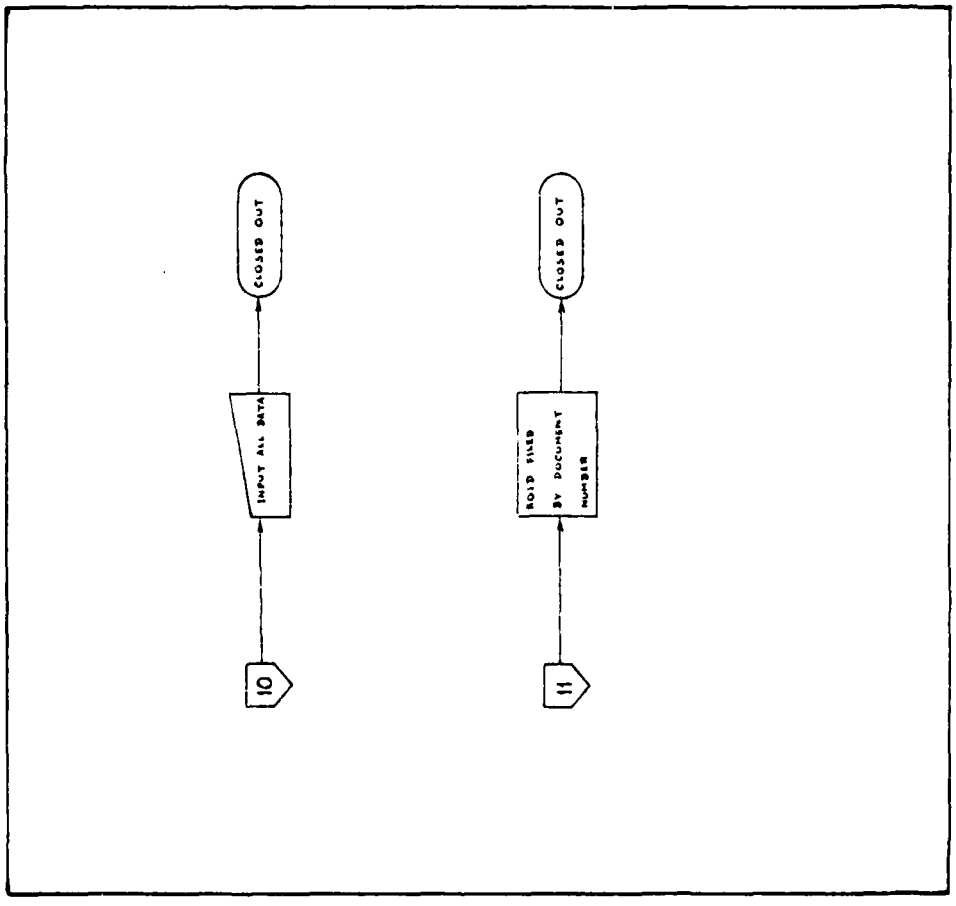
CLOSED OUT
INPUT ALL DATA
10
CLOSED OUT
AOID FILES BY DOCUMENT NUMBER
11

APPENDIX J

SPSS SUBPROGRAM BREAKDOWN STATISTICS
FOR SHIPPER'S RESPONSE TIME BASED ON
1352 OBSERVATIONS

TABLE J-1

Response Time Broken Down By Type of Discrepancy Reported

DESCRIPTION OF SUBPOPULATIONS

CRITERION VARIABLE: LAGTIME DAY RDIP SENT MINUS DAY RECEIVED BACK
BROKEN DOWN BY: DISCREP TYPE OF SHIPMENT DISCREPANCY

VARIABLE	CODE	VALUE LABEL	SUM	MEAN	STD DEV	VARIANCE		N
FOR ENTIRE POPULATION			57412.0000	42.4645	55.5416	3084.0892	(	1352)
DISCREP	1.	NO DOCUMENTATION	6803.0000	16.8391	23.1347	535.2123	(	404)
DISCREP	2.	ALL OVERAGES	10204.0000	46.5936	56.8695	3234.1414	(	219)
DISCREP	3.	INCORRECT ITEMS	16729.0000	52.2781	63.6668	4053.4553	(	320)
DISCREP	4.	ALL SHORTAGES	14891.0000	60.5325	62.5255	3909.4418	(	246)
DISCREP	5.	DEFECTIVE ITEMS	4737.0000	71.7727	70.5082	4971.4091	(	66)
DISCREP	6.	MISDIRECTED SHIPMENT	0.	0.	0.	0.	(	11)
DISCREP	7.	UNSPECIFIED DISCREPS	3914.0000	48.9250	51.5908	2661.6146	(	80)
DISCREP	8.	TECHNICAL PROBLEMS	134.0000	22.3333	6.3456	40.2667	(	6)

TOTAL CASES = 1352

TABLE J-2

Response Time Broken Down By Shipping Activity

DESCRIPTION OF SUBPOPULATIONS

CRITERION VARIABLE: LAGTIME — DAY FOLD SENT MINUS DAY RECEIVED BACK
BROKEN DOWN BY: SHIPPER — ACTIVITY TO WHICH FOLD WAS SENT

VARIABLE	CODE	VALUE LABEL	SUM	MEAN	STD DEV	VARIANCE	N
FOR ENTIRE POPULATION			57412.0000	42.4645	55.5416	3084.8692	(1352)
SHIPPER	1.	65A-GEN SER ADMIN	13808.0000	32.6009	54.2416	2942.1557	(426)
SHIPPER	2.	DLA-DEF LOG AGENCY	16308.0000	46.9971	55.1604	3042.6676	(347)
SHIPPER	3.	LFS-LCL FORCE SOURCE	20911.0000	46.7433	49.9762	2499.8230	(448)
SHIPPER	4.	AFD-AIR FORCE DEPOT	5372.0000	46.6261	73.7175	5434.2712	(115)
SHIPPER	5.	NAV-NAVY DEPOT	41.0000	41.0000	0.	0.	(1)
SHIPPER	6.	ARD-ARMY DEPOT	495.0000	99.0000	94.2694	8890.5000	(5)
SHIPPER	7.	OTH-ALL OTHER SOURCE	147.0000	14.7000	28.3708	804.9000	(10)

TOTAL CASES = 1352

TABLE J-3

Response Time Broken Down By Shipper Response
to Discrepancy Report

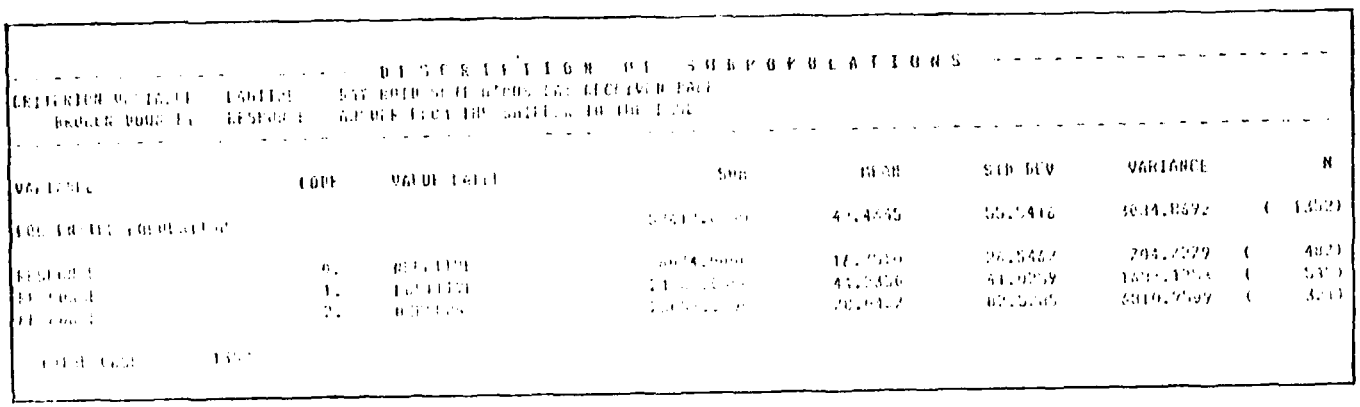

DESCRIPTION OF SUBPOPULATIONS

CRITERION VARIABLE LABELLE [illegible] RECEIVED [illegible]
BROKEN DOWN BY RESPONSE [illegible] SHIPPER TO THE [illegible]

VARIABLE	CODE	VALUE LABEL	SUM	MEAN	STD DEV	VARIANCE	N
FOR ENTIRE POPULATION			[illegible]	[illegible]	[illegible]	[illegible]	([illegible])
RESPONSE	0.	[illegible]	[illegible]	[illegible]	[illegible]	[illegible]	([illegible])
RESPONSE	1.	[illegible]	[illegible]	[illegible]	[illegible]	[illegible]	([illegible])
RESPONSE	2.	[illegible]	[illegible]	[illegible]	[illegible]	[illegible]	([illegible])

[illegible]

SELECTED BIBLIOGRAPHY

A. REFERENCES CITED

1. Air Force Logistics Command. Distribution Quality Assurance Program. AFLCR 74-13, Change 3. Wright-Patterson AFB OH, 18 October 1978.

2. _____. Reports of Item Discrepancy (ROIDs) received by AFLC Activities from Off-Base Customers. LOG-QE(M) 7604. Wright-Patterson AFB OH, 9 November 1979.

3. Anderson, John F. Accountable Officer, Inventory Accounting Branch, Stock Control Division, Defense Electronics Supply Center, Defense Logistics Agency, Dayton OH. Personal interview. 30 April 1980.

4. Bardi, Edward J., and John J. Coyle. The Management of Business Logistics. New York: West Publishing Co., 1976.

5. Bonner, Cora. Supply Clerk, Reports Control Section, Quality and Reliability Branch, Quality Assurance Division, Defense Electronics Supply Center, Defense Logistics Agency, Dayton OH. Personal interview. 23 April 1980.

6. Bowersox, Donald F. Logistical Management. 2d ed. New York: Macmillan Publishing Co., Inc., 1978.

7. Brinker, Connie J. Supply Clerk, Reports Control Section, Quality and Reliability Branch, Quality Assurance Division, Defense Electronics Supply Center, Defense Logistics Agency, Dayton OH. Personal interview. 23 April 1980.

8. Brown, Robert F. ROID Monitor, Procedures Standardization and Analysis Unit, 2750 Supply Squadron, Wright-Patterson AFB OH. Personal interviews conducted intermittently from 20 July 1979 through 29 April 1980.

9. Cook, Captain Bradford L., USAF. MAJCOM Supply Operations Officer, Supply Procedures Branch, HQATC, Randolph AFB TX. Telephone interviews conducted intermittently from 25 September 1979 through 3 November 1979.

10. Cooper, Steve D. "A Total System for Measuring Delivery Performance," Journal of Purchasing and Materials Management, Fall 1977, pp. 22-26.

11. Dauchan, Margaret L. Supply Clerk, Reports Control Section, Quality and Reliability Branch, Quality Assurance Division, Defense Electronics Supply Center, Defense Logistics Agency, Dayton OH. Personal interview. 23 April 1980.

12. "DoD Loses Millions in Foreign Sales," Air Force Times, September 5, 1977, p. 17.

13. Faber, Donald A. Chief, Quality and Reliability Branch, Defense Electronics Supply Center, Defense Logistics Agency, Dayton OH. Personal interviews conducted intermittently from 31 October 1979 through 30 April 1980.

14. Glaskowsky, Nicholas A., J.L. Haskett and Robert M. Ivie. Business Logistics: Management of Physical Supply and Distribution. New York: The Ronald Press Company, 1964.

15. Grassel, SSgt. Lark A. Wing Surveillance Technician, Procedures and Standardization Section, Management and Procedures Branch, 338 Supply Squadron, Keesler AFB MS. Telephone interview. 2 April 1980.

16. Greer, Teresa. Accounting Technician, Accounts Receivable Group, Financial Section, Capital Fund Branch, Accounting and Finance Division, Office of the Comptroller, Defense Electronics Supply Center, Defense Logistics Agency, Dayton OH. Personal interview. 30 April 1980.

17. Griswold, Lieutenant Colonel John W., USA. "AMC International Logistic Item Discrepancies." Unpublished research report, unnumbered. U.S. Army Logistics Management Center, Fort Lee VA, February 1974.

18. Gurganus, Master Sergeant Charles L., USAF. Assistant NCOIC, Procedures and Standardization Section, Management and Procedures Branch, 410 Supply Squadron, K.I. Sawyer AFB MI. Telephone interviews conducted intermittently from 19 November 1979 through 7 April 1980.

19. "Hill Panel Charges Supply 'Rip Off,'" Air Force Times, August 14, 1979, p. 1.

20. Holden, Laura M. Supply Clerk, Reports Control Section, Quality and Reliability Branch, Quality Assurance Division, Defense Electronics Supply Center, Defense Logistics Agency, Dayton OH. Personal interview. 23 April 1980.

21. Huber, C. AFR 67-16 Monitor, Policy and Procedures, HQ USAF/LEYSP, Washington DC. Telephone interview. 30 October 1979.

22. Johnson, Linda. Chief, Reports Control Section, Quality and Reliability Branch, Quality Assurance Division, Defense Electronics Supply Center, Defense Logistics Agency, Dayton OH. Personal interviews conducted intermittently from 31 October 1979 through 5 May 1980.

23. Jones, D.K. Assistant DSC/Logistics Operations, HQ USAF/LOZ. Letter, Subject: Project STOP LOSS, RCS: HAF-LEY(M)7902, to OC-ALC, OO-ALC, WR-ALC, MASDC and others, 24 July 1979.

24. Kelly, Lieutenant General John B., Jr., USAF. DSC/Logistics and Engineering, HQ USAF/LE. Letter, Subject: Project STOP LOSS, to ALMAJCOM, 9 August 1978.

25. Kirk, Roger E. Experimental Design: Procedures for the Behavioral Sciences. Belmont CA: Brooks/Cole Publishing Company, 1968.

26. Knight, Kenneth E., and Reuben R. McDaniel, Jr. Organizations: An Information Systems Perspective. Belmont CA: Wadsworth Publishing Company, Inc., 1979.

27. Kyser, Pat. Accounting Technician, International Logistics Center, HQ AFLC, Wright-Patterson AFB OH. Personal interview. 9 November 1979.

28. Liesey, John C. Chief, Management Information and Analysis Division, Defense Electronics Supply Center, Defense Logistics Agency, Dayton OH. Personal interview. 14 November 1979.

29. Meska, E. Norman. Management Analyst, Management and Analysis Division, Defense Electronics Supply Center, Defense Logistics Agency, Dayton OH. Personal interview. 14 November 1979.

30. Michaels, Steven R., and Halsey R. Jones. Organizational Management: Concepts and Practice. New York: Intext Educational Publishers, 1973.

31. Morse, Lieutenant Colonel Richard T., USAF. Chief, Quality Assurance Division, Defense Electronics Supply Center, Defense Logistics Agency, Dayton OH. Personal interviews conducted intermittently from 25 September 1979 through 5 May 1980.

32. Nair, Marayanan K. Material Management. New York: Asia Publishing House, 1967.

33. Neter, John, William Wasserman and G.A. Whitmore. Applied Statistics. Boston: Allyn and Bacon, Inc., 1978.

34. Nie, Norman H., et al. Statistical Package for the Social Sciences. 2d ed. New York: McGraw-Hill Book Co., 1975.

35. Perry, Virginia. Acting Director, Logistics Study Office, U.S. Army Logistics Management Center, Fort Lee VA. Telephone interview. 29 October 1979.

36. Reed, Nell M. Oklahoma City Logistics Center, OC-ALC/DSQAB. Letter, subject: Meeting minutes of the ROID Workshop to OC-ALC/DSQ and others. 26 November 1979.

37. Ryan, Phyllis D. Supply Clerk, Reports Control Section, Quality and Reliability Branch, Quality Assurance Division, Defense Electronics Supply Center, Defense Logistics Agency, Dayton OH. Personal interview. 23 April 1980.

38. Shatzer, Oscar S. Quality Assurance Specialist, Quality Office, Management Support Division, Storage and Transportation Directorate (DESC-TMQ), Defense Electronics Supply Center, Defense Logistics Agency, Dayton OH. Telephone interview. 1 May 1980.

39. Slay, General Alton D., USAF Commander HQ AFSC/CC. Letter, subject: Project STOP LOSS, to all Divisions, Centers and others. 24 August 1978.

40. Slaybough, C.J. "Pareto's Law and Modern Management," Price Waterhouse Review, Winter 1966, p. 27.

41. Stanford, Roger. Programmer/Analyst, Center Support Branch, Systems Analysis and Programming Division, Defense Electronics Supply Center, Defense Logistics Agency, Dayton OH. Personal interviews conducted intermittently from 15 December 1979 through 22 April 1980.

42. Tornichio, John L. Quality Assurance Specialist, HQ AFLC, Office of the Assistant to the Commander for Quality Assurance, Wright-Patterson AFB OH. Personal interview, 25 January 1980.

43. U.S. Department of Defense. Instruction Number 5010.34, Subject: Productivity Enhancement, Measurement and Evaluation Operating Guidelines and Reporting Instructions, Washington DC, 4 August 1975.

44. _____. Military Standard Billing System. Regulation 4000.25-7-M, Chapter 11. Washington: Government Printing Office, 12 July 1973.

45. U.S. Defense Electronics Supply Center. DESC Quality and Reliability Program. DESC Regulation 4155.1. Dayton OH, 6 September 1974.

46. _____. DESC Quality and Reliability Manual. DESC Manual 4155.2. Dayton OH, July 1973.

47. _____. DESC Quality Evaluation (Closed History) Report. DESC Report No. ECQA00EM, Dayton OH, 25 March 1980.

48. _____. Quality Evaluation System: Closed Documents Report. DESC Report No. ECQA00EB, Dayton OH, 24 October 1979.

49. _____. Recurring Reports. DESC Handbook 5000.5. Dayton OH, 30 July 1979.

50. _____. Supply Availability and Workload Analysis Report. DESC Report No. DF067. Part 1, Form 109, Stocked Items By Service and Part 5, Form 110, Non Stocked Items by Service, Dayton OH, June through September 1979.

51. U.S. Defense Logistics Agency. An Introduction to the Defense Logistics Agency. DLA Pamphlet, unnumbered. Cameron Station VA, 1979.

52. _____. Procedures for Processing Discrepancy Reports From Distribution Activities. DLA Manual 4140.2, Vol. II, pt. 3, Appendix E-398 P. Dayton OH, 1979.

53. _____. Quality Deficiency Reports. DLA Regulation 4155.7, Dayton OH, 7 August 1975.

54. U.S. Department of the Air Force. Automated Material System Interfaced with Supply System and Base Level. AFM 177-206. Washington: Government Printing Office, 1 August 1979.

55. _____. Monthly Base Supply Management Report. Part 2, Report No. M32. Requisition Summary of Supplies. Reports covering Wright-Patterson AFB OH; Keesler AFB MS; Sawyer AFB MI: and Mather AFB CA for period June-September 1979.

56. _____. Reporting and Processing of Discrepancy Reports Against Foreign Military Sales Shipments. AFR 67-7. Washington: Government Printing Office, 31 March 1976.

57. _____. Reporting of Item Discrepancies Attributable to Shippers. AFR 67-16. Washington: Government Printing Office, 14 April 1976.

58. _____. Reporting of Item and Packaging Discrepancies. AFR 400-54. Washington: Government Printing Office, 1 February 1980.

59. _____. Supply Management Reference Book. AF PAM 67-2. Washington: Government Printing Office, 15 March 1976.

60. _____. USAF Supply Manual. AFM 67-1, Vol. I, Part One, Amendments 12 and 27. Washington: Government Printing Office, 18 October 1976.

61. _____. USAF Supply Manual. AFM 67-1, Vol. I, Part Two, Amendment 18. Washington: Government Printing Office, 2 October 1978.

62. _____. USAF Supply Manual. AFM 67-1, Vol. II, Part Two. Washington: Government Printing Office, 1 November 1978.

63. _____. USAF Supply Manual. AFM 67-1, Vol. V, Amendment 1. Washington: Government Printing Office, 27 November 1978.

64. _____. USAF Supply Manual. AFM 67-1, Vol. IX. Washington: Government Printing Office, 13 August 1979.

65. U.S. General Accounting Office. "Control Over the Physical Inventories of the Army and Navy." General Accounting Office Report No. B-146828. Washington: Government Printing Office, October 1979. LD 43065A.

66. _____. "GSA Can Reduce Procurements by Millions If More Material Returns are Accepted." General Accounting Office Report No. B-96983. Washington: Government Printing Office, January 1979. LD 43213A.

67. Voich, Dan, Jr., Homer J. Mottice, and William A Schrode. Information Systems for Operations and Management. Cincinnati: South-Western Publishing Co., 1975.

68. Wagner, Joseph H. Quality Assurance Specialist, Quality and Reliability Branch, Quality Assurance Division, Defense Electronics Supply Center, Defense Logistics Agency, Dayton OH. Personal interview. 15 and 20 October 1979.

69. Ward, Donna. Supply Systems Analyst, Materiel Readiness Branch, Supply Management Division, Directorate of Supply Operations, HQ DLA, Cameron Station VA. Telephone interview. 26 November 1979.

70. Weinberg, Colonel Sidney. Chief, Supply Management Division, Supply Operations, HQ DLA/DSC, Letter, subject: Processing Reports of Item Discrepancy (ROIDs) Associated with Incorrect Material, to DESC-OM, DCSC-OM, DGSC-OM, DISC-OB and DPSC-ER, 17 August 1979.

71. "Well-Planned Mailroom Can Save Corporate Dollars," The Journal Herald, December 22, 1979, p. 18.

72. Young, Master Sergeant Raymond D. NCOIC, Management Analysis Section, Management and Procedures Branch 323 Supply Squadron, Mather AFB CA. Telephone interview. 26 March 1980.

B. RELATED SOURCES

Ackoff, Russell L. "Management Misinformation System," Management Science, December 1967, pp. B147-B156.

Albanese, Robert. Managing Toward Accountability for Performance. Homewood IL: Richard D. Irwin, Inc., 1978.

Brennan, Lieutenant Colonel William S. Chief, Stock Control Division (DESC-OS), Defense Electronics Supply Center, Defense Logistics Agency, Dayton OH. Personal interview. 30 April 1980.

Chervany, Norman L., and Gary W. Dickson. "An Experimental Evaluation of Information Overload in a Production Environment," Management Sciences, June 1974, pp. 1335-1344.

Cox, Captain Michael C., USAF, and Captain James W. O'Neal, USAF. "Evaluating the Ability of the Maintenance Data Collection System to Enhance the Air Force Munitions Product Assurance Program." Unpublished master's thesis, LSSR-9-79A, AFIT/SL, Wright-Patterson AFB OH, June 1979. AD A072696.

Florence, Leland H., Jr. "An Analysis of the Supply Standard Cost System as Used by the Air Force Logistics Command." Unpublished research report, unnumbered. Air Command and Staff College, Maxwell AFB AL, May 1965. AD 910417L.

Gajdalo, Steven. "Improvements to the Loss/Loss Recovery Reporting System." Unpublished research report no. IRO 233, AMC Inventory Research Office, U.S. Army Logistics Management Center, Frankford Arsenal, Philadelphia PA, June 1975. AD A012151.

Harrison, E. Frank. The Managerial Decision-Making Process. Boston: Houghton Mifflin Company, 1975.

Horowitz, Joel L. "An Efficiency-Effectiveness Indicator System for Depots." Unpublished technical report no. RAC-TP-351, Research Analysis Corporation, McLean VA, June 1969. AD 854730.

Price, Gerald F. "The Ten Commandments of Data Base," Journal of Data Management, May 1972, pp. 14-23.

Schoderbek, Peter P., Asterios G. Kefalas, and Charles G. Schoderbek. Management Systems: Conceptual Considerations. Dallas: Business Publications, Inc., 1975.

U.S. Defense Electronics Supply Center. Annual DESC Fact Book. Pamphlet RCS: C(Q)11(D/SO), FY 1979.